INSTRUCTION MANUAL

HD 6800C • HD 6805C

SINGER®

This household sewing machine is designed to comply with IEC/EN 60335-2-28 and UL1594.

IMPORTANT SAFETY INSTRUCTIONS

When using an electrical appliance, basic safety precautions should always be followed, including the following:

Read all instructions before using this household sewing machine. Keep the instructions at a suitable place close to the machine. Make sure to hand them over if the machine is given to a third party.

DANGER –TO REDUCE THE RISK OF ELECTRIC SHOCK:

- A sewing machine should never be left unattended when plugged in. The electrical socket, to which the machine is plugged in should be easily accessible. Always unplug this sewing machine from the electric outlet immediately after using and before cleaning, removing covers, lubricating or when making any other user servicing adjustments mentioned in the instruction manual.

WARNING –TO REDUCE THE RISK OF BURNS, FIRE, ELECTRIC SHOCK, OR INJURY TO PERSON:

- Do not allow to be used as a toy. Close attention is necessary when this sewing machine is used by or near children.
- Use this sewing machine only for its intended use as described in this manual. Use only attachments recommended by the manufacturer as contained in this manual.
- Never operate this sewing machine if it has a damaged cord or plug, if it is not working properly, if it has been dropped or damaged, or dropped into water. Return the sewing machine to the nearest authorized dealer or service center for examination, repair, electrical or mechanical adjustment.
- Never operate the sewing machine with any air openings blocked. Keep ventilation openings of the sewing machine and foot control free from the accumulation of lint, dust, and loose cloth.
- Keep fingers away from all moving parts. Special care is required around the sewing machine needle.
- Always use the proper needle plate. The wrong plate can cause the needle to break.
- Do not use bent needles.
- Do not pull or push fabric while stitching. It may deflect the needle causing it to break.
- Wear safety glasses.
- Switch the sewing machine off (“0”) when making any adjustment in the needle area, such as threading needle, changing needle, threading bobbin, or changing presser foot, etc.
- Never drop or insert any object into any opening.
- Do not use outdoors.
- Do not operate where aerosol (spray) products are being used or where oxygen is being administrated.
- To disconnect, turn all controls to the off (“0”) position, then remove plug from outlet.
- Do not unplug by pulling on cord. To unplug, grasp the plug, not the cord.
- The foot control is used to operate the machine. Never place other objects on the foot control.
- Do not use the machine if it is wet.
- If the LED lamp is damaged or broken, it must be replaced by the manufacturer or its service agent or a similarly qualified person, in order to avoid a hazard.

- If the cord connected with the foot control is damaged, it must be replaced by the manufacturer or its service agent or a similarly qualified person, in order to avoid a hazard.
- This sewing machine is provided with double insulation. Use only identical replacement parts. See instructions for Servicing of Double-Insulated Appliances.

SAVE THESE INSTRUCTIONS

FOR CENELEC COUNTRIES ONLY:
This appliance can be used by children aged from 8 years and above and persons with reduced physical, sensory or mental capabilities or lack of experience and knowledge if they have been given supervision or instruction concerning use of the appliance in a safe way and understand the hazards involved. Children shall not play with the appliance. Cleaning and user maintenance shall not be made by children without supervision.

The noise level under normal operating conditions is less than 80 dB.

The machine must only be used with foot control of type C-8000 manufactured by Zeng Hsing, Taiwan.

FOR NON CENELEC COUNTRIES:
This sewing machine is not intended for use by persons (including children) with reduced physical, sensory or mental capabilities, or lack of experience and knowledge, unless they have been given supervision or instruction concerning use of the sewing machine by a person responsible for their safety. Children should be supervised to ensure that they do not play with the sewing machine.

The noise level under normal operating conditions is less than 80 dB.

The machine must only be used with foot control of type C-8000 manufactured by Zeng Hsing, Taiwan.

SERVICING OF DOUBLE INSULATED PRODUCTS

In a double-insulated product, two systems of insulation are provided instead of grounding. No ground means is provided on a double-insulated product, nor should a means for grounding be added to the product. Servicing of a double-insulated product requires extreme care and knowledge of the system and should be done only by qualified service personnel. Replacement parts for a double-insulated product must be identical to those parts in the product. A double-insulated product is marked with the words ‘DOUBLE INSULATION’ or ‘DOUBLE INSULATED’.

TABLE OF CONTENTS

INTRODUCTION 1
Intended Use 1
Machine Overview 1
Needle Area Overview 2
Top of Machine 2
Overview Accessories 3
Included Accessories (Not Pictured) 3
Presser Feet 4
Optional Accessories 5
Stitch Overview 6
Utility Stitches 6
Decorative Stitches 8

PREPARATIONS 9
Unpacking the Machine 9
Connect to the Power Supply 9
Packing Machine after Sewing 9
Free Arm/Removable Accessory Tray 10
Presser Foot Lifter 10
Thread Knife 10
Spool Pin 11
Wind the Bobbin 12
Insert the Bobbin 12
Thread the Machine 13
Needle Threader 14
Needles 14
Important Needle Information 15
Selection Guide — Needle Size, Fabric, Thread 15
Change the Needle 15
Thread Tension 16
Sew without Feed Teeth 16
Presser Foot Pressure 16
Change the Presser Foot 17

OPERATING YOUR MACHINE 18
Machine Operation Controls 18
Reverse Button 18
Start/Stop 18
Needle Up/Down 18
Tie-Off 18
Automatic Thread Cutter 18
Speed Control Lever 18
Stitch Control Panel 19
Display 19
Stitch Menu / Sound On/Off 19
Stitch Width / Needle Position 19
Stitch Length 19
Stitch Selection Buttons 19
Sequence Controls 20
Automatic Stop Setting 20
Needle Up/Down Setting 20
Mirror Side to Side 20
Elongation 20
Sewing Mode 20
Display — Sewing Mode 20
Select a Stitch 21
Sequence Mode 22
Display in Sequence Mode 22
Create a Sequence 22
Sew Out a Sequence 23

SEWING 24
Sewing 24
Start to Sew – Straight Stitch 24
Change Needle Position 24
Change Sewing Direction 25
Finish Sewing 25
Straight Stretch Stitch 25
Multi-Step Zigzag Stitch 26
Slant Overedge Stitch 26
Closed Overlock Stitch 27
Blind Hems 27
Darning and Mending 28
Repair Large Holes 28
Repair Tears 28
Repair Small Holes 29
Jeans Hem 29
Button Sewing 30
One-Step Buttonhole 31
Sew Zippers 32
Centered Zipper 32
Hand-Look Quilt Stitch 33

MAINTENANCE 34
Cleaning the Machine 34
Cleaning the Bobbin Area 34
Cleaning under the Bobbin Area 34
Troubleshooting 35
Technical Specification 38

INTRODUCTION

Intended Use

Optimal use and maintenance are described in these instructions. This product is not intended for industrial use.

Additional assistance, by region, may be found on the web at www.singer.com.

Machine Overview

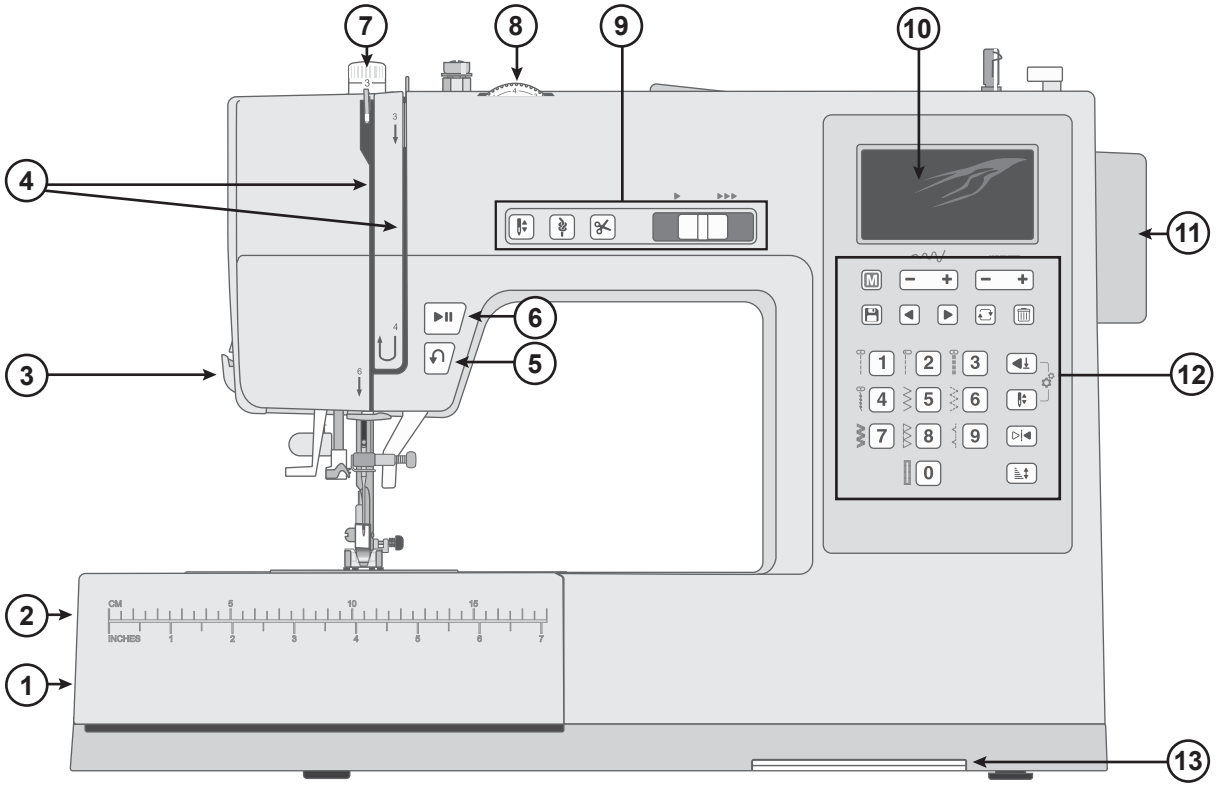

1. **Feed Teeth Lever** — move from side to side to engage or disengage the feed teeth. Positioned at the back of the free arm.
2. **Accessory Tray / Free Arm** — provides a flat surface when sewing and allows storage for your accessories. Remove the accessory tray to use the free arm which makes it easier to sew, e.g., trouser hems and sleeves.
3. **Thread Knife** — for trimming thread ends at the end of sewing.
4. **Threading Slots** — thread paths with tension discs and take up lever.
5. **Reverse Button** — Press and hold to sew in reverse, e.g., when securing the beginning or ending of a seam.
6. **Start/Stop Button** — Press to start and stop sewing without using the foot control.
7. **Presser Foot Pressure** — controls the pressure the presser foot exerts onto the fabric.
8. **Thread Tension Dial** — set the right tension for your stitch, thread and fabric.
9. **Machine Operation Controls** — functions used to make your sewing more convenient (see page 18).
10. **Display** — Current stitch and settings are displayed.
11. **Hand Wheel** — used to manually control the movement of the needle and the thread take-up lever.
12. **Stitch Control Panel** — Choose stitch menu, select stitch and adjust your stitch settings with these buttons. Here you also find functions for sequencing, mirroring and elongation (see page 19).
13. **Stitch Charts** — Slide forward and view all stitches available on your machine.

Needle Area Overview

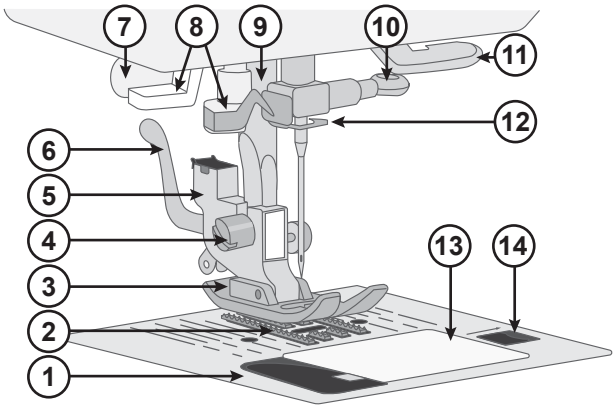

1. **Needle Plate** — provides a flat area around presser foot for sewing. Guide lines make it easy to guide the fabric straight when sewing.
2. **Feed Teeth** — feed the fabric under the presser foot when sewing.
3. **Presser Foot** — holds fabric against feed teeth which draws fabric under the presser foot as you sew.
4. **Presser Foot Holder Screw** — loosen the screw to remove the presser foot holder.
5. **Presser Foot Holder** — holds the presser foot.
6. **Presser Foot Release Lever** — press this lever to release the presser foot from the holder.
7. **Buttonhole Lever** — used for buttonhole sewing.
8. **Built-in Needle Threader** — thread the needle quickly and easily.
9. **Presser Foot Bar** — accommodates the presser foot holder.
10. **Needle Clamp Screw** — secures the needle.
11. **Thread Guide** — helps maintain thread flow when sewing.
12. **Needle Thread Guide** — helps maintain thread flow when sewing.
13. **Bobbin Cover** — protects the bobbin while sewing.
14. **Bobbin Cover Release Button** — push to open the bobbin cover.

Top of Machine

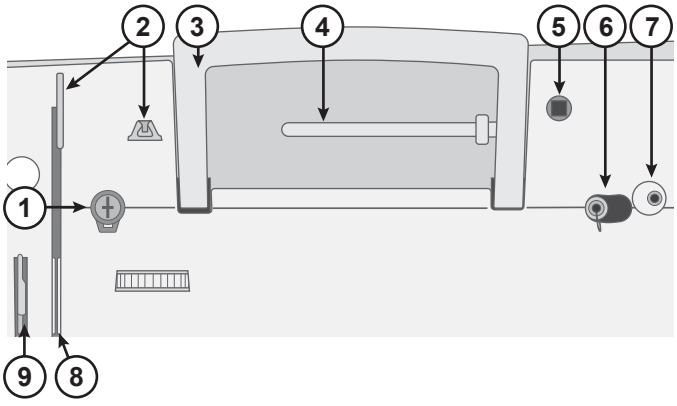

1. Bobbin winding tension disc
2. Thread guides
3. Handle
4. Spool pin
5. Hole for auxiliary spool pin
6. Bobbin winding spindle
7. Bobbin winding stopper
8. Thread tension discs
9. Thread take-up lever

Overview Accessories

Bobbin x4 — Only use the type of transparent bobbins delivered with your machine (SINGER® Class 15 transparent bobbins). One of the bobbins is inserted in the machine upon delivery.

Felt Pad — Used to cushion the spool of thread when using the Auxiliary Spool Pin.

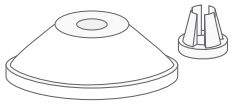

Spool Cap — Two sizes (large and small) for various thread spool styles.

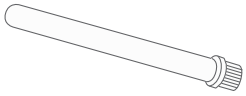

Auxiliary Spool Pin — For sewing with large thread spools or when using specialty threads.

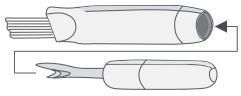

Brush and Seam Ripper — Used to remove stitches/brush off lint.

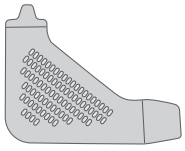

L-Screwdriver — Used to remove the needle plate, presser foot holder or needle screw.

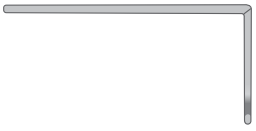

Edge/Quilting Guide — Used for straight and accurate sewing, e.g., when quilting. Insert the guide into the slot at the back of the presser foot holder. Adjust the position to fit your project.

Included Accessories (Not Pictured)

- Needles
- Foot control
- Power cord
- Soft cover

Presser Feet

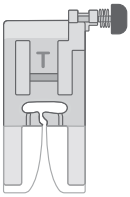

All Purpose Foot (T)
(attached on the machine upon delivery)

This foot is used for general sewing on most types of fabric. The bottom of the foot is flat, so that the fabric is held down firmly against the feed teeth while sewing. It also has a wide slot so that the needle can move from left to right, depending on which stitch you sew.

The foot has a “lock in place” button, the button is pushed to lock the foot in horizontal position when sewing over thick seams (see page 29).

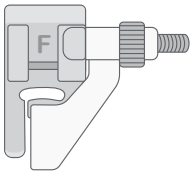

Blind Hem Foot (F)
The Blind Hem Foot is used for sewing blind hems in fashions and home decor. There is an adjustable guide with an extension at the front, used to guide the fold of the hem while stitching.

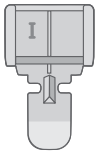

Zipper Foot (I)
This foot is used for inserting zippers. Attach the foot to the presser foot holder on either side of the foot, depending on which side of the zipper is being sewn. The Zipper Foot can also be used to create and insert piping.

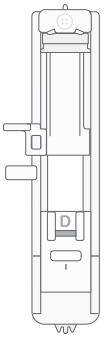

One–Step Buttonhole Foot (D)
This foot allows you to make perfectly sized buttonholes for your button. It has a space at the back for a button, used to set the size of the buttonhole. The machine will automatically sew a buttonhole to fit that button size.

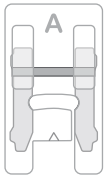

Satin Stitch Foot (A)
This foot is used for satin stitches and other decorative stitches.

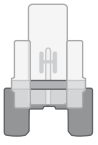

Button Sewing Foot (H)
The Button Sewing Foot quickly and neatly sews on buttons, eliminating the need to sew them manually.

The foot sits on top of the button, with the opening positioned around the holes.

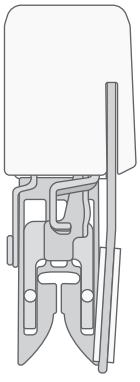

Even Feed Foot
The Even Feed Foot, sometimes called a Walking Foot, is used for sewing several layers of fabric, especially when quilting. It is also great for sewing fabrics with nap or pile to keep them from shifting as you sew.

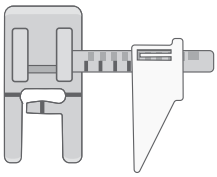

Sew Easy Foot
This foot has a guide to help you sew the most accurate seams every time. The foot has an extension marked with the most popular seam allowances and a movable fabric guide that can be set wherever you want for the project you are making.

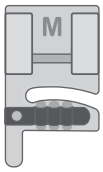

Cording Foot
The Cording Foot is mainly used to add surface embellishment to fabrics. Lightweight cords are guided by grooves on top of the foot during stitching. Use a single cord in center as a method for gathering firmer fabrics.

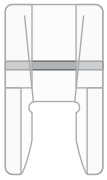

Open Toe Foot
The Open Toe Foot is used for satin stitch appliqués and other decorative sewing.

Optional Accessories

Additional optional accessories are available for your machine. Visit the SINGER® website for more information.

Stitch Overview

Utility Stitches

The stitches described in the below chart are utility stitches, used mainly for utility sewing.

The most frequently used stitches are printed next to the stitch selection buttons on the front of the machine (Stitch Menu 1). Those stitches are selected by touching the corresponding button (if Menu 1 is active). Stitches on menu 2–4 are printed on the Stitch Charts that can be pulled out at the bottom of the machine.

When sewing, use a thread tension between 3–5. Always test sew on a piece of scrap fabric, and adjust the tension if necessary.

			Application
	Straight Stitch Center Position		The basic stitch used for sewing. The most common use for a straight stitch is to sew two pieces of fabric together.
	Straight Stitch Left Position		For all types of sewing.
	Straight Stretch Stitch		Stronger than a regular straight stitch, on stretch knit fabrics, because it locks three times — forward, backward and forward again. Use it to reinforce seams of sportswear and for curved seams which take a lot of strain.
	Stretch Stitch		For seams in tricot and stretch fabrics.
	Zigzag Stitch		A very versatile stitch for decorative sewing, applique and attaching ribbons and trims.
	Multi-Step Zigzag Stitch		Finish seam allowances to prevent the fabric from unravelling. When seam finishing, the smaller step of the stitches will help keep fabric more flat than a regular zigzag. It can also be used for mending tears and sewing elastic.
	Reinforced Zigzag Stitch		For joining fabric edge to edge or overlapping in leather. For decorative sewing.
	Overlock Stitch		Sew seam and overcast in one step along the edge or trim later. For medium and medium/heavy stretch fabrics.
	Blind Hem Stitch		Sew hems that are practically invisible from the right side of the fabric. It is used for skirts, dresses, trousers, curtains etc, made with non-stretch fabrics.
	Stretch Blind Hem Stitch		Sew hems that are practically invisible from the right side of the fabric. It is used for garments and other projects made with stretch knit fabrics.
	Slant Overedge Stitch		Seam and overcast in one step along the edge or trim later. For medium and heavy stretch fabrics.

	Closed Overlock Stitch		Sew decorative hems and overlapped seams, belts and bands. For medium/heavy stretch fabrics.
	Honeycomb Stitch		For elastic insertion, decorative stitching, smocking, couching and hemming.
	Seam/Overcast Stitch		Seam and overcast in one step along the edge or trim later. For light stretch and non-stretch fabrics.
	Buttonhole		Sew buttonholes on home decór, garments, crafts and more.
	Rounded Bartack Buttonhole		For light weight fabrics.
	Rounded Bartack Buttonhole, Reinforced		For light weight fabrics.
	Keyhole Buttonhole		Square end for tailored jackets, coats, etc.
	Keyhole Buttonhole, Reinforced		Square end for tailored jackets, coats, etc.
	Keyhole Buttonhole, Tapered		Tapered end for tailored garments.
	Keyhole Buttonhole, Rounded		For blouses and children’s garments.
	Heavy Duty Buttonhole		For medium and heavy fabrics.
	Stretch Buttonhole		For stretch fabrics.
	Bartack Stitch		Reinforce pockets, shirt openings, belt loops as well as at lower end of a zipper.

	Darning Stitch		Darn and mend small holes in work clothes, jeans, tablecloths and linen towels.
	Eyelet		For belts, laces, etc.
	Button Sewing Stitch		For sewing on buttons.

Decorative Stitches

Your machine also features decorative stitches. The stitches not described in the previous chart are decorative stitches. When sewing the decorative stitches, make sure to use a stabilizer underneath the fabric for better appearance. Use a thread tension between 3–5. Always test sew on a piece of scrap fabric, and adjust the tension if necessary.

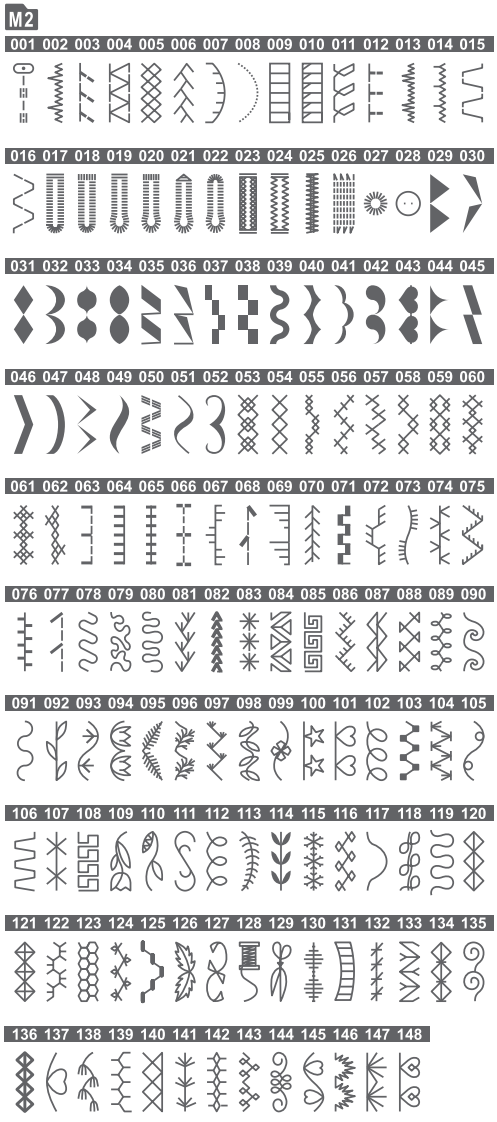

Stitch Menu 2

Stitch Menu 3 and 4 — Block and Outline Font

PREPARATIONS

Unpacking the Machine

1. Place the box on a steady, flat surface. Lift the machine out of the box, and remove the packaging.
2. Remove all outer packing material and the plastic bag.
3. Wipe off the machine with a dry cloth to remove any lint and/or excess oil around the needle area.

Note: Your sewing machine is adjusted to provide the best stitch result at normal room temperature. Extreme hot and cold temperatures can affect the sewn result.

Connect to the Power Supply

Among the accessories you will find the power cord and the foot control.

Note: Consult a qualified electrician if in doubt as how to connect the machine to the power source. Unplug the power cord when the machine is not in use.

For this sewing machine, foot control model C-8000 manufactured by Zeng Hsing, Taiwan must be used.

On the bottom right side of the sewing machine, you find the connecting sockets and the ON/OFF button.

1. Connect the foot control cord to the front socket on the bottom right side of the machine (A).
2. Connect the power cord to the rear socket on the bottom right side of the machine (B). Plug the cord into the wall socket.
3. Press the ON/OFF switch (C) to "I" to turn on power and light.

The sewing speed is regulated by pressing the foot control.

Note: After turning off the machine, residual power may remain in the machine. This could cause the light to stay on for a few seconds while the power is consumed. This is normal for an energy efficient appliance.

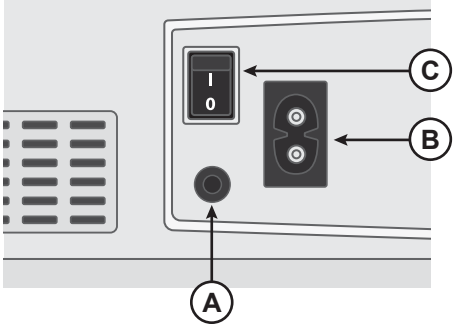

For the USA and Canada

This sewing machine has a polarized plug (one blade wider than the other). To reduce the risk of electric shock, this plug is intended to fit in a polarized outlet only one way. If the plug does not fit fully in the outlet, reverse the plug. If it still does not fit, contact a qualified electrician to install the proper outlet. Do not modify the plug in any way.

Packing Machine after Sewing

1. Switch the main switch off. After switching off, residual power may still remain in the machine. This may cause the light to stay on for a few seconds while the power is consumed. This is normal behavior for an energy efficient appliance.
2. Unplug the cord from the wall socket and then from the machine.
3. Wind the cord around the foot control for easy storage.
4. Place all accessories in the accessory tray. Slide the tray on to the machine around the free arm.
5. Place the foot control and cord in the space above the free arm.
6. Place the soft cover on the machine to help protect it from dust and lint.

Free Arm/Removable Accessory Tray

Store presser feet, bobbins, needles and other accessories in the accessory tray so that they are easily accessible.

Keep the accessory tray on the machine to provide a larger, flat work surface.

Use the free arm to facilitate sewing trouser legs and sleeve hems. To use the free arm, slide off the accessory tray. When attached, a hook keeps the accessory tray securely attached to the machine. Remove the tray by sliding it to the left.

When the accessory tray is removed from the machine, open the door by putting a finger in the groove at the left side of the accessory box (A) and carefully pull it open. Push the door closed before putting the tray back onto the machine.

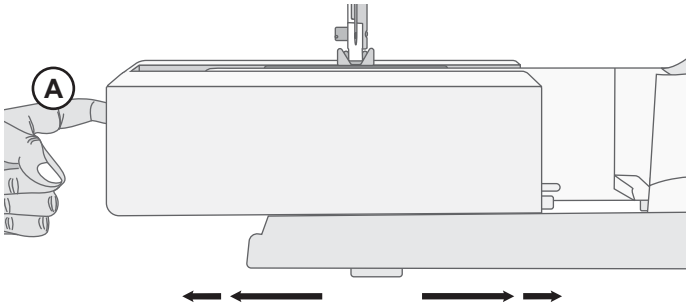

Presser Foot Lifter

The presser foot lever is located at the right side of the sewing machine head. The lever is used to raise and lower the presser foot. Raise the lever up for machine threading, lower it for sewing.

By raising the presser foot lever and then pressing it farther upwards, the lift height of the presser foot is increased to an extra height allowing you to slide very thick projects under the foot.

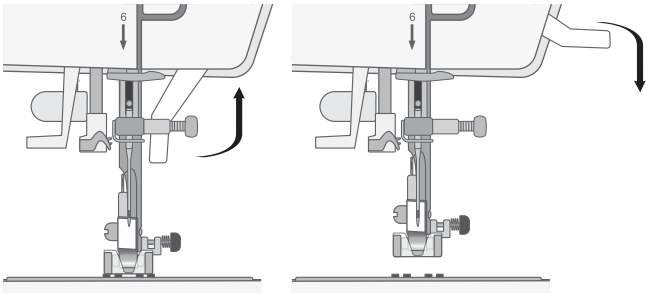

Thread Knife

To use the thread knife, pull the thread from back to front as illustrated. Doing this will leave the thread ends long enough so that the needle doesn't become unthreaded when you start to sew again.

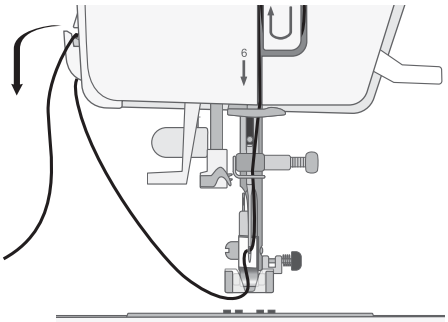

Spool Pin

Your machine has two spool pins, a main spool pin and an Auxiliary Spool Pin. The spool pins are designed for all types of thread. The main spool pin is used in a horizontal position (the thread reels off the spool) and the Auxiliary Spool Pin in a vertical position (the thread spool rotates). Use the horizontal position for normal threads and the vertical position for large spools or specialty threads.

Main Spool Pin

Place the thread spool on the spool pin. Make sure that the thread reels off the spool counter clockwise and slide on a spool cap. Use a spool cap slightly larger than the thread spool. For narrow thread spools (A), use a smaller spool cap in front of the spool. For large thread spools (B), use a larger spool cap in front of the spool. The flat side of the spool cap should be pressed firmly against the spool. There should be no space between the spool cap and the thread spool.

Note: Not all thread spools are manufactured in the same way. If you experience problems with the thread, turn it in the opposite way or use the vertical position.

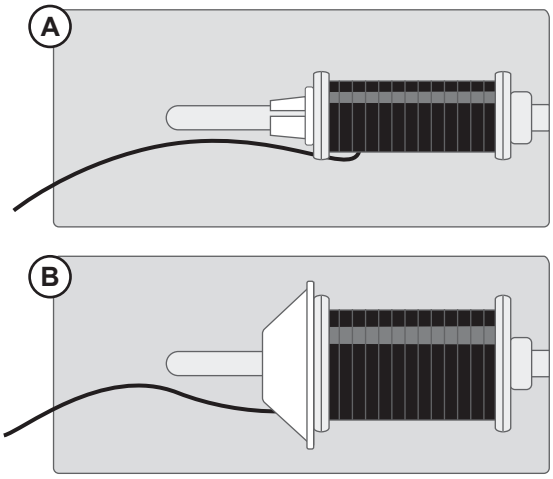

Auxiliary Spool Pin

The Auxiliary Spool Pin is used when winding a bobbin thread from a second spool of thread or when sewing with large spools or with specialty threads. Insert the Auxiliary Spool Pin into the designated hole at the top of the machine. Place a felt pad under the thread spool. This is to prevent the thread from reeling off too fast. Do not place a spool cap on top of the spool pin as that would prevent the spool from rotating.

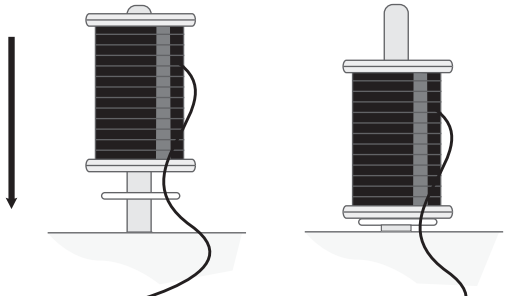

Wind the Bobbin

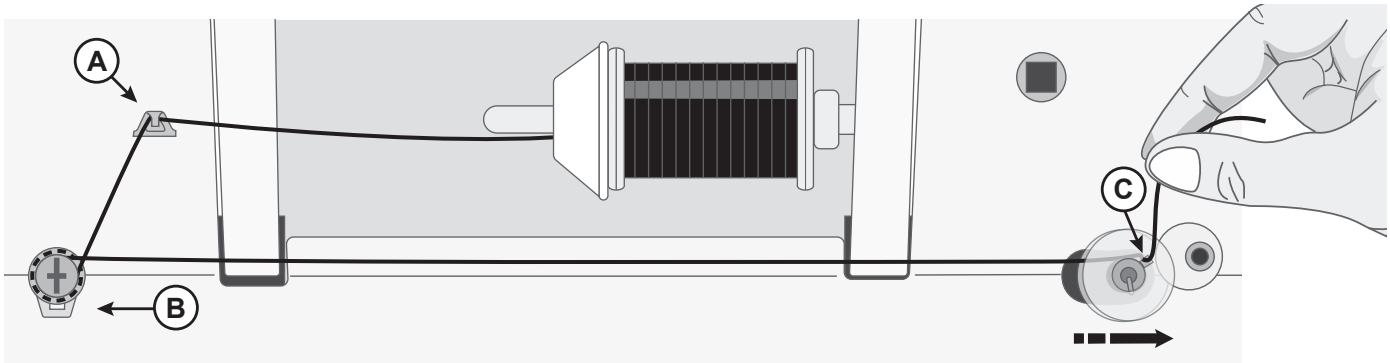

1. Place the thread spool on the spool pin. Slide a spool cap firmly against the spool.
2. Place the thread into the thread guide (A) from front to the back. Bring the thread clockwise around the bobbin winding tension disc, making sure that the thread is pulled snuggly between the discs.
3. Thread through the hole in the bobbin (C) from the inside to the outside.
4. Place the bobbin on the bobbin winding spindle. Make sure the bobbin is pushed down firmly.
5. Push the bobbin winding spindle to the right. Hold the thread end, and press the foot control to start winding.

   After a few turns, take your foot off the foot control to stop winding. Cut the excess thread tail above the bobbin, making sure to trim it close to the bobbin. Step on the foot control to resume winding. When the bobbin is full, the bobbin winding will slow down and stop automatically.

   Note: You can also start the winding by long pressing the start/stop button.

   When the winding spindle is pushed to the right, a bobbin winding icon is shown on the display (D).
6. Push the bobbin winding spindle to the left. Remove the bobbin and cut the thread.

Note: When the bobbin winding spindle is pushed to the right, the machine will not sew. Make sure to push the bobbin spindle back to the sewing position (left) before sewing.

Insert the Bobbin

Note: Make sure that the needle is fully raised and the machine is turned off before inserting or removing the bobbin.

1. Remove the bobbin cover (A) by pushing the small button to the right of the cover (B) towards the right.
2. Insert the bobbin in the bobbin case with the thread running in a counterclockwise direction.
3. With the tip of your finger on the bobbin, pull the thread slightly to the right and under the guide (C) then towards the left. Continue guiding the thread up toward the left and around the curve (D). Bring it down the channel toward the front and into the bobbin thread knife (E).
4. Replace the bobbin cover and pull the thread to the right to cut off the excess thread.

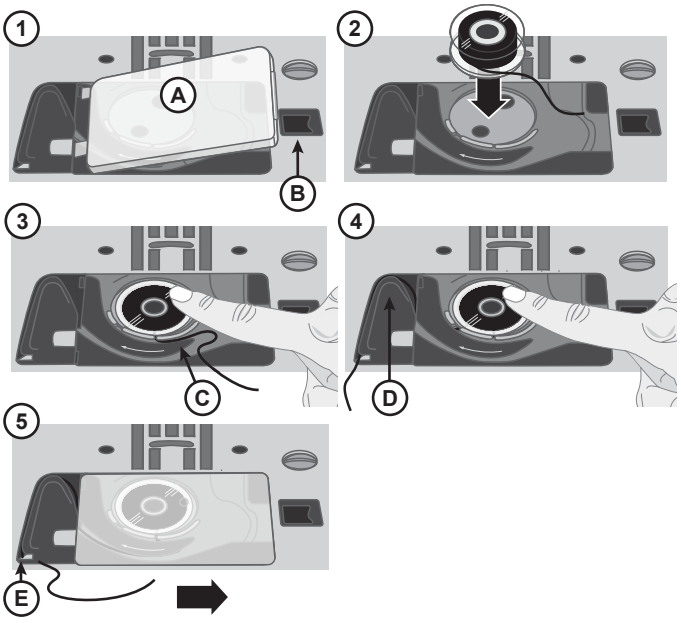

Thread the Machine

Important! Make sure that the presser foot is raised and the needle is in its highest position by turning the handwheel toward you. This is very important to help ensure that the machine is correctly threaded. Not doing so can result in poor stitch quality when you start to sew.

1. Place the thread on the spool pin and fit the appropriately sized spool cap.
2. Pull the thread into the thread guide (A) from front to the back and thread guide (B) from back to front. Pull the thread between the tension discs (C).
3. Continue bringing the thread down through the right threading slot, around the U-turn, then back upwards through the left threading slot.
4. Bring the thread from the right into the take-up lever (D) and down in the left-hand threading slot, into the lower thread guide (E) and to the needle thread guide (F).
5. Thread the needle from front to back.

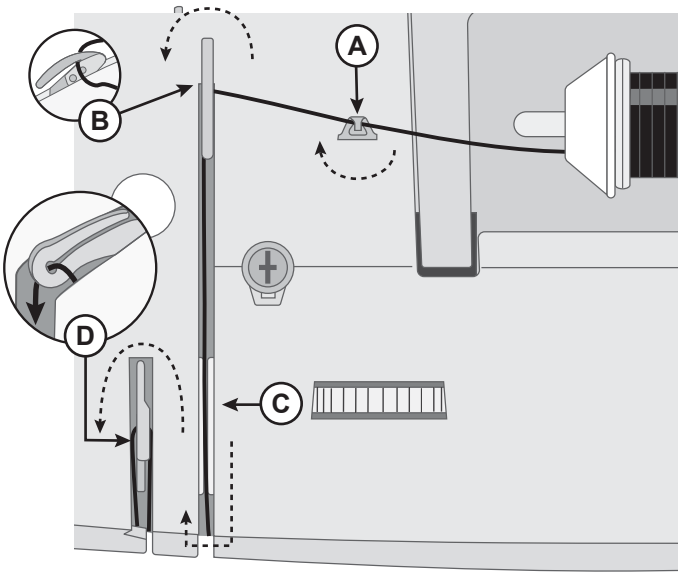

Machine from above

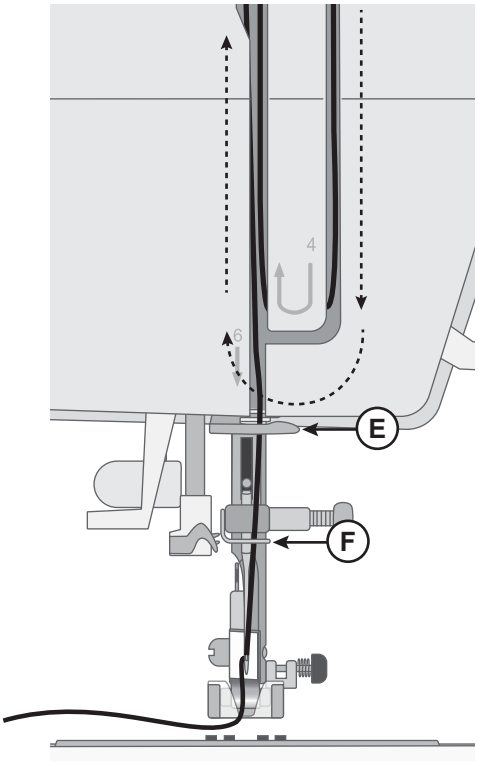

Machine from front

Needle Threader

The built-in needle threader allows you to thread the needle quickly and easily.

The needle must be in its highest position to use the built-in needle threader. Turn the hand wheel towards you until the needle is in its highest position, or press the needle up/down button. It is also recommended that you lower the presser foot.

- Use the handle (A) to pull the needle threader all the way down. The metal flanges cover the needle. A small hook will pass through the needle eye (B).
- Place the thread from the back over the thread guide (C) and under the small hook (D).
- Let the needle threader gently swing back. The hook pulls the thread through the needle eye and forms a loop behind the needle. Pull the thread loop out behind the needle.
- Raise the presser foot and place the thread under it.
- Pull out about 6–8” (15–20cm) of thread beyond the needle eye. This will prevent the machine from coming unthreaded when you start to sew.

Note: The needle threader is designed to be used for size 70-110 needles. You cannot use the needle threader for size 60 needles or smaller, wing needles or twin needles. There are also some optional accessories that require manual threading of the needle. When threading the needle manually, make sure that the needle is threaded from front to back.

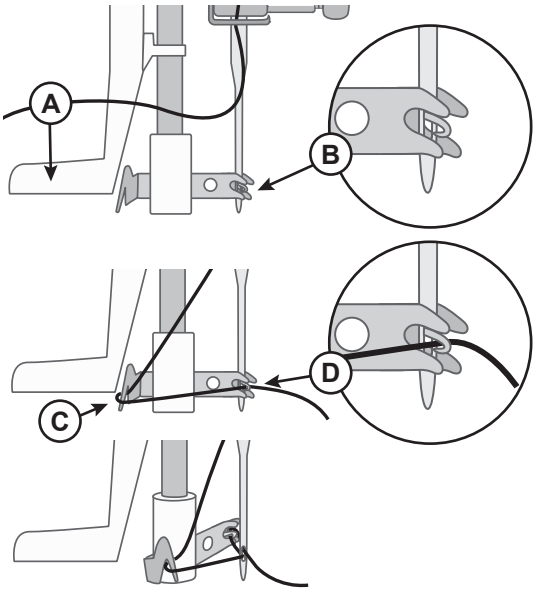

Needles

The sewing machine needle plays an important role in successful sewing. Use only quality needles. We recommend needles of system 130/705H. The needle package included with your machine contains needles of the most frequently used sizes.

⚠ *Be sure to match the needle to the thread you are using. Heavier threads require a needle with a larger needle eye. If the needle eye is too small for the thread the needle threader may not work properly.*

Universal Needle
Universal needles have a slightly rounded point and come in a variety of sizes. For general sewing in a variety of fabric types and weights.

Stretch Needle
Stretch needles have a ball point and a special scarf to eliminate skipped stitches when there is a flex in the fabric. For knits, swimwear, fleece, synthetic suedes and leathers.

Denim Needle
Denim needles have a sharp point to penetrate tightly woven fabrics without deflecting the needle. For canvas, denim, microfibers.

Embroidery Needle
Embroidery needles have a special scarf, a slightly rounded point and a slightly larger eye to avoid damage to thread and materials. Use with metallic and other specialty threads for embroidery and decorative sewing.

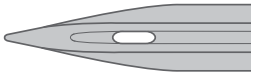

Wing Needle
Wing needles have wide extensions on each side of the needle to poke holes in the fabric when sewing entredeux and other hemstitches on natural fiber fabrics.

Important Needle Information

Change the needle often. As a general rule, needles should be changed every 6-8 hours of actual stitching time.

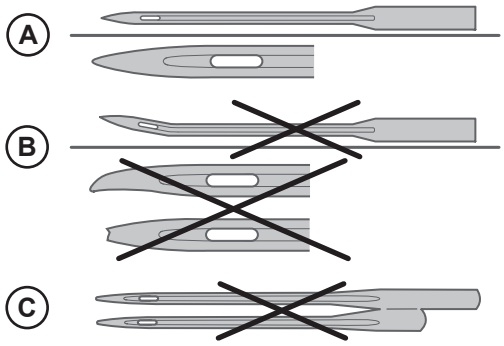

Always use a straight needle with a sharp point and make sure the point is not bent or damaged (A).

A damaged needle (B) can cause skipped stitches, breakage or snapping of the thread. It can also damage the needle plate.

Do not use asymmetrical twin needles (C), they can damage your sewing machine.

Selection Guide — Needle Size, Fabric, Thread

Needle Size	Fabric	Thread
70–80 (9–11)	Lightweight fabrics: Fine cotton, voile, silk, muslin, interlock, tricot, jersey, crepe, polyester, chiffon, organza, organdy	Light duty all purpose thread
80-90 (11-14)	Medium weight fabrics: Quilting cotton, satin, double knit, lightweight wool, rayon, polyester, lightweight linen	Use polyester threads on synthetic fabrics and all-purpose or cotton thread on natural fabrics for best results.
90 (14)	Medium weight fabrics: Firm woven, medium weight linen, cotton/polyester blend, terrycloth, chambray, double knit	
100 (16)	Heavy weight fabrics: Canvas, wool, denim, home decor, fleece, heavy knit	
110 (18)	Heavy weight fabrics: Coat weight wool, upholstery fabrics	Heavy duty thread for needle, with all-purpose thread for the bobbin.

Change the Needle

Note: Before you begin changing the needle, it can be helpful to place a small piece of paper or fabric underneath the needle area, over the hole in the needle plate, so that the needle doesn't accidentally fall down into the machine.

1. Loosen the needle clamp screw. If it feels tight, use the screwdriver from your accessories to aid with loosening the screw.
2. Remove the needle.
3. Push the new needle upwards into the needle clamp with the flat side away from you.
4. When the needle will go up no further, tighten the screw securely.

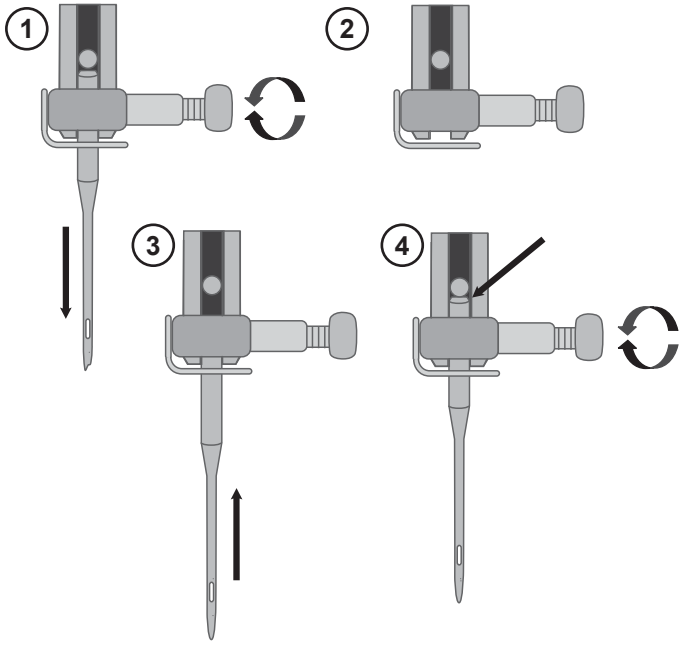

Thread Tension

To set the thread tension, turn the dial on top of the machine. Depending on the fabric, thread, etc, the tension may need to be adjusted. For the best stitch appearance and durability, make sure the needle thread tension is correctly adjusted. For general sewing, the threads evenly meet between the two layers of fabric (A).

If the bobbin thread is visible on the top side of the fabric, the needle thread tension is too tight (B). Reduce the needle thread tension.

If top thread is visible on the underside of the fabric, the needle thread tension is too loose (C). Increase the needle thread tension.

For decorative stitches and buttonholes, the top thread should be visible on the underside of the fabric.

Make a few tests on a scrap piece of the fabric you are going to sew and check the tension.

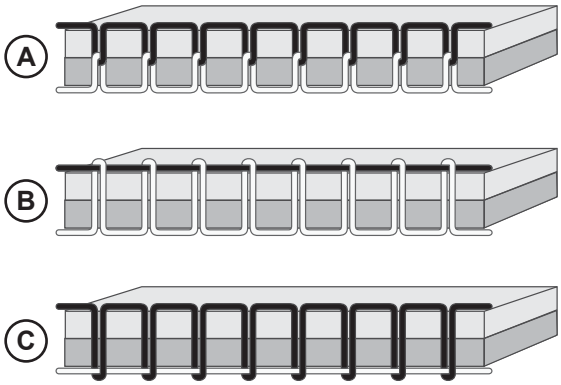

Sew without Feed Teeth

When sewing on buttons or doing other sewing techniques where you don't want the fabric to feed, you need to lower the feed teeth.

The feed teeth lever is found at the back of the free arm.

1. Lower the feed teeth by moving the lever to the “Feed Teeth Down” position.
2. Raise the feed teeth by moving the lever to the “Feed Teeth Up” position.

Note: The feed teeth will not raise immediately when the lever is switched. Turn the hand wheel toward you one full turn or start sewing to re-engage the feed teeth.

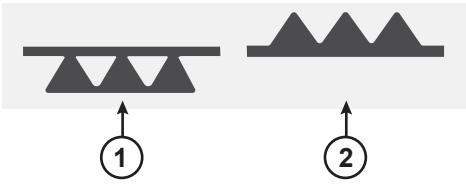

Presser Foot Pressure

The presser foot pressure is used to control the amount of pressure that the presser foot exerts onto the fabric, to ensure smooth feeding of the fabric while sewing. The presser foot pressure has been pre-set to the standard value "2". Though it needs no adjustment for most fabrics, it can be adjusted for very thick or very thin fabric - increase for heavy weight fabrics, decrease for lightweight fabrics.

Note: If the dial is turned counterclockwise too much, it could come off. If this happens, simply replace the dial and turn it clockwise until it stays in place.

Note: If the dial is turned clockwise until it comes to a stop, it has reached the maximum pressure available. Do not try to turn the dial any further!

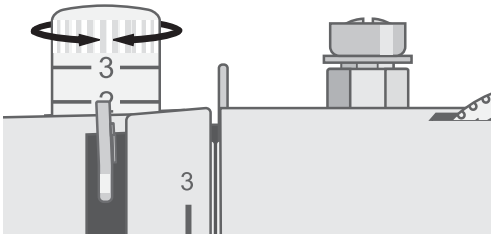

Change the Presser Foot

1. Make sure that the needle is in the highest position and the presser foot is lifted. The presser foot release lever extends out the back of the presser foot holder. Press this lever to release the presser foot.
2. To attach a presser foot to the holder, place the desired presser foot with its pin directly under the slot in the presser foot holder. Lower the presser foot lifter and the presser foot will snap into place.

   Note: If you find it difficult to place the presser foot in the correct position, keep the release lever pressed while lowering the presser foot. Use your thumb to carefully guide the presser foot into the correct position and it will snap into place.

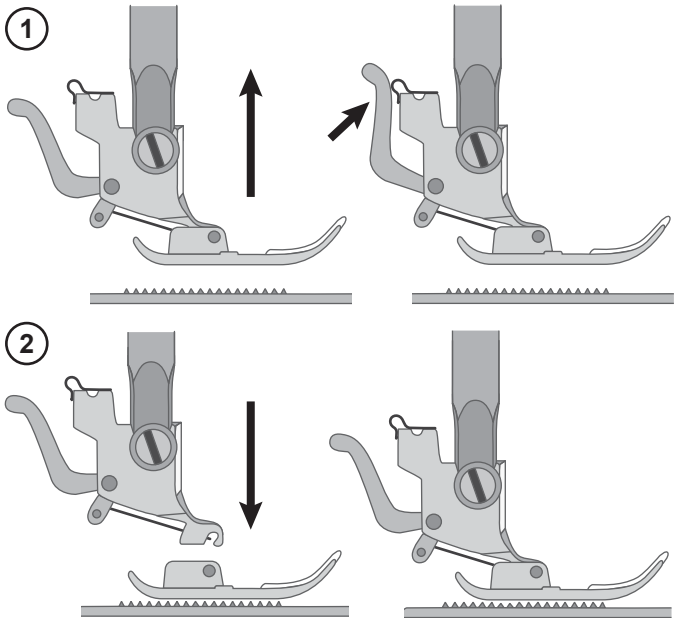

OPERATING YOUR MACHINE

Machine Operation Controls

The Operation Control buttons are used to operate the machine. Each functionality is listed and described further below.

Reverse Button

The Reverse Button has different functionality depending on what stitch that is selected.

Stitch Menu 1 (*stitch no. 1–5*) and Stitch Menu 2 (*stitch no. 001*)
Press and hold the Reverse button to sew in reverse. Release it to resume sewing forward. The machine sews in reverse only as long as the reverse button is pressed.

Stitch Menu 1 (*stitch no. 6–9*), Stitch Menu 2 (*stitch no. 002–016 & 029–148*), Stitch Menu 3 and Stitch Menu 4
Press the Reverse button and the machine sews 3 tie-off stitches then stops automatically.

Start/Stop

START/STOP is used to run and stop the machine without the foot control. Long press to begin sewing and press again to stop sewing.

Needle Up/Down

Press Needle Up/Down to move the needle down or up. The setting of the needle stop position is changed at the same time. You can also tap the foot control to raise or lower needle.

If the “Needle Up/Down setting” (see page 20) is activated, this is indicated by an arrow pointing up or down, next to the needle on the display.

Tie-Off

When pressed the machine immediately sews three tie-off stitches and stops automatically.

If “Auto Stop” (see page 20) is activated, the machine will complete the current stitch (or program) first, then tie-off and stop automatically.

Automatic Thread Cutter

Press the Automatic Thread Cutter button and your machine ties off the threads, cuts the top and bobbin threads.

To cut threads at the end of a stitch or stitch program, press Automatic Thread Cutter while sewing.

Speed Control Lever

All stitches in your sewing machine have a pre-set, recommended sewing speed. You can adjust the speed using the Speed Control Lever. Slide the lever to the left to decrease the speed and to the right to increase the speed. You cannot select a higher speed than the default max speed for the selected stitch.

Stitch Control Panel

The functions on the Stitch Control Panel are used to select and adjust stitches and program fonts. Each functionality is listed and described further below.

1. Display
2. Stitch menu / Sound on/off
3. Program mode
4. Selection arrows
5. Stitch selection buttons
6. Stitch width
7. Stitch length
8. Repeat program
9. Delete stitches in program
10. Automatic stop setting
11. Needle up/down setting
12. Mirror stitch
13. Elongation

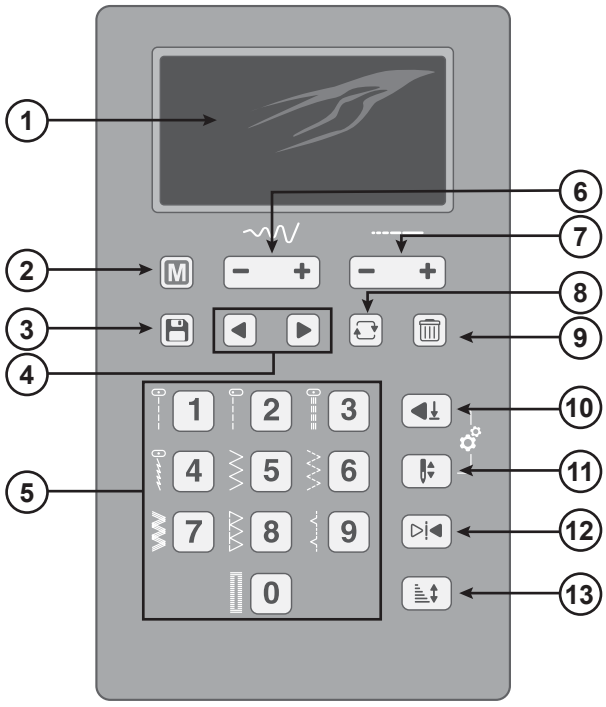

Display

On the display, you can see the current stitch with the set length, width and presser foot recommendation. You can also see activated functions such as bobbin winding, buttonhole sewing and bobbin winding.

Stitch Menu / Sound On/Off

Press to toggle between the Stitch Menus. There are four stitch menus, 1. Utility Stitches, 2. Utility & Decorative Stitches, 3. Font — Block and 4. Font — Oultine. The selected menu is shown on the display.

This button is also used to turn off the machine sound. Press and keep depressed for 2 seconds with the machine turned on, when an audio beep is heard, the sound is turned off. Press for 2 seconds until two audio beeps are heard and the sound is turned back on. The setting remains even if the machine is turned off.

Stitch Width / Needle Position

When you select a stitch, your machine automatically sets the best stitch width. The default setting is indicated on the display. The stitch width can be adjusted between 0–7mm. Some stitches have a limited stitch width. Increase the stitch width by pressing “+”, decrease it by pressing “-”.

When a straight stitch or a reinforced straight stitch is selected, the Stitch Width button is used to adjust the needle position. When pressing “+”, the needle position is moved to the right. When pressing “-”, the needle moves to the left. The current needle position is indicated on the display.

Stitch Length

When you select a stitch, your machine automatically sets the best stitch length. The default setting is indicated on the display. The stitch length can be adjusted between 0–4.5mm. Some stitches have a limited stitch length. Increase the stitch length by pressing “+”, decrease it by pressing “-”.

Stitch Selection Buttons

The stitches shown next to the selection buttons has a direct selection. Just push the button next to the stitch to select it.

The other stitches and the corresponding stitch numbers are shown on the Stitch Charts available to slide forward and view at the lower right of the machine.

By pressing the stitch numbers in quick succession you will be able to select a stitch from the selected stitch menu. If the stitch number does not exist in the selected stitch menu, the machine beeps.

Sequence Controls

Sequencing — Press to enter Sequence mode.

Navigation Arrows — Use these buttons to move back and forth in your sequence.

Repeat — Press to sew your sequence repeatedly.

Delete — Press to delete the selected stitch in a sequence.

Automatic Stop Setting

Press this button to activate the Automatic Stop setting. When active, the icon is lit on the display (see). Use “Auto Stop” together with the “Tie-Off”. If you press the tie-off button when “Auto Stop” is activated, your machine will finish the current stitch, then tie-off and stop automatically.

Needle Up/Down Setting

Press the needle stop up/down to set the position of the needle when you stop sewing. The needle will move up or down when you press the button. When the needle stop down is set, a needle icon with an arrow pointing down is shown on the display. If needle stop up is set, the arrow on the display is pointing up (see). The default setting is Needle Up, and it will be activated each time the machine is turned on.

Mirror Side to Side

Press to mirror the selected stitch sidewise.

If straight stitch with a left needle position is selected, touching this button will move the needle from left to right symmetrically across the center position.

Elongation

Press to elongate the selected stitch. The elongation can only be used for satin stitches and does not affect the density of the stitch.

Sewing Mode

Display — Sewing Mode

Sewing Mode is the first view on the display after you turn on the machine. Here you will find all the basic information you need to start sewing. This is also where you adjust the settings of your stitch. Straight stitch is selected by default.

Note: When the values/settings shown on the display are set to default, their corresponding figures/icons will be framed (A). If you change the values/settings the frame around the figures/icons will be will be removed.

1. **Needle position** — if the default needle position is adjusted (or if straight stitch is selected), the active one is shown here
2. **Recommended presser foot** — indicates what presser foot is recommended to use for the selected stitch to obtain the best stitch result
3. **Active stitch menu** — what stitch menu is active
4. **Stitch number** — the currently selected stitch with number and graphic
5. **Needle stop position** — indicates if needle “UP” or “DOWN” is active
6. **Auto-Stop is activated**
7. **Mirror image** — if activated, the stitch image will also be mirrored
8. **Elongation** — the number indicate how much the stitch is elongated (x1 is default setting)
9. **Buttonhole lever indicator**— indicate that a buttonhole is selected
10. **Bobbin winding indicator** — indicates that the bobbin winding motor is activated
11. **Stitch length** — the current length for the selected stitch
12. **Stitch width** — the current width for the selected stitch (when straight stitch is selected, no width is shown, instead the needle position icon is shown)

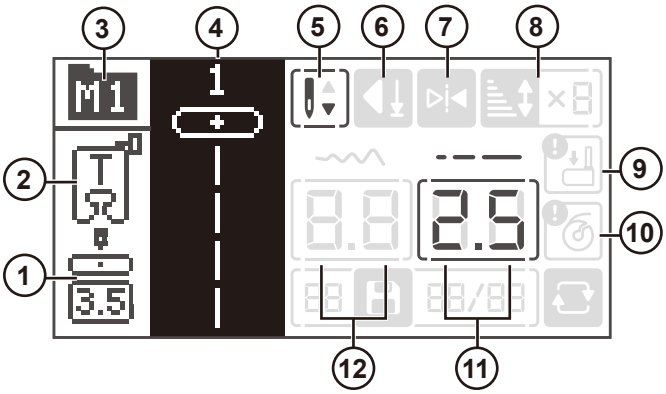

Select a Stitch

Your machine has four stitch menus. Menu 1 includes the most frequently used utility stitches, and are printed on the machine next to the stitch selection buttons, Menu 2 has both utility and decorative stitches. Menu 3–4 are a Font menus. Here, you will find two sets of font styles, letters and numbers you can use to create sequences.

When you turn on your machine, stitch menu 1 is activated and straight stitch (stitch no. 1) is selected (A).

Press “Stitch Menu” (B) to toggle between the stitch menus. The currently selected menu is shown on the display (A).

The stitches on Menu 1 have a direct selection. Once Menu 1 is selected, just press the button next to the stitch to select it (C).

The stitches on Menus 2–4 are pictured on the Stitch Reference Charts that can be pulled out at the bottom of the machine. The Stitch Menu number is listed within a folder above the stitches (D). The Stitch Number is printed above the picture of respective stitch (E).

By pressing the digits in quick succession you will be able to select a stitch from 10 and up from the selected stitch menu (F). If the stitch number does not exist in the selected menu you will hear a beep and the latest selection will remain.

To select another stitch in the same menu just press the number of the stitch.

To select a stitch in another menu you will first need to change stitch menu and then select the stitch.

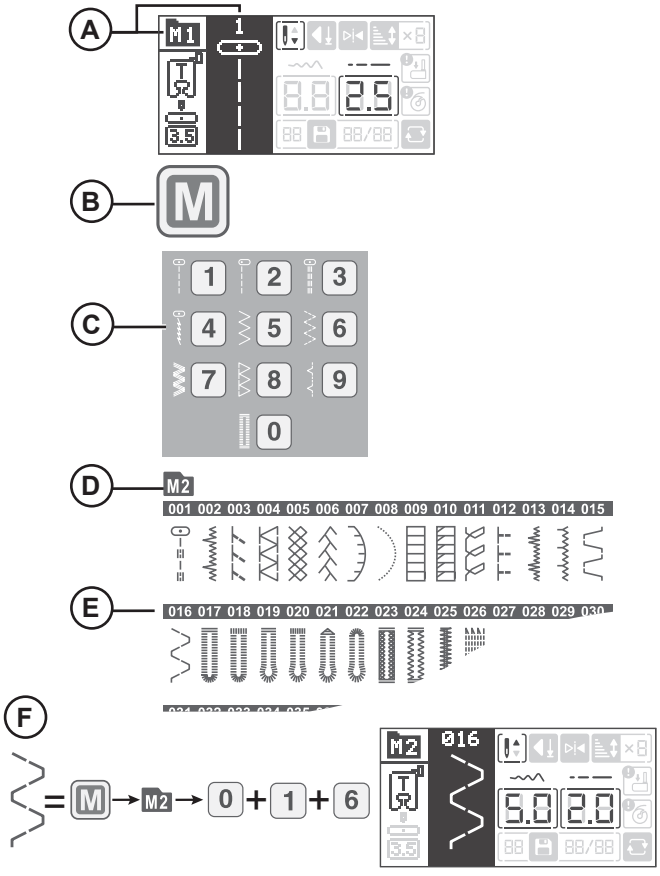

Sequence Mode

Display in Sequence Mode

Press the Sequence button to enter sequence mode. Any stitch except buttonholes, eyelets and darning stitch can be combined in a sequence. The total number of stitches allowed in a sequence are 40.

1. **Recommended presser foot** — indicate what presser foot that is recommended to use for the selected stitch to obtain the best stitch result
2. **Active stitch menu** — Stitches that can be programmed are found on Stitch Menu 4, Fonts. This menu is selected automatically when entering programming mode.
3. **Number and graphic of currently selected stitch**
4. **The stitch has been mirrored** (also seen in the stitch field (3))
5. **The stitch has been elongated**
6. **Width** of the currently selected stitch.
7. **Length** of the currently selected stitch.
8. **Repeat** — indicate that repeat sequence is activated. The sequence will be sewn repeatedly until you stop sewing.
9. **Total number of stitches in the sequence** — total number of stitches allowed (40 positions)
10. **Position of the currently selected stitch** — indicate what position the currently selected stitch has in the sequence
11. **Sequence Mode** — indicate that sequence mode is active

Note: When the settings shown on the display are set to default, their corresponding figures will be framed (A). If you change the settings the frame around the figures will be will be removed.

Sequence Button

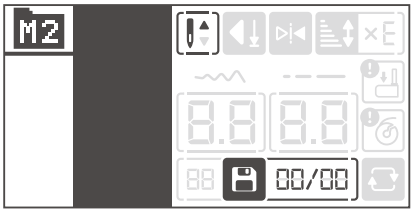

Sequence Mode, no stitches in memory

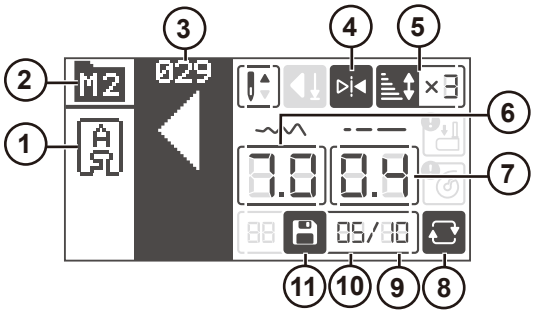

Sequence Mode, stitches in memory

Create a Sequence

1. Press the Sequence button to enter Sequence mode. Activate Stitch Menu 4.
2. Pull out the Stitch Chart to see which stitch number that refers to which letter/number.

   To program “SINGER”, would be stitch number 029, 019, 024, 017, 015, 028 (A).
3. Select the stitch you will use. On the display, you can see the selected stitch number and what position it has in the sequence (B).
4. Select another stitch and it will appear as the next stitch in the sequence.
5. Continue until your sequence is complete.

You can step through the sequence with the navigation arrows. The selected stitch number is highlighted on the display (C).

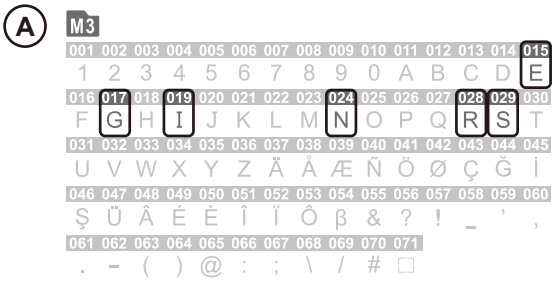

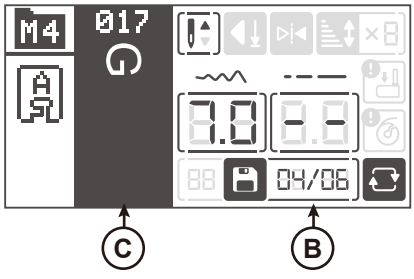

Edit a Sequence

To delete a stitch in the sequence, select the stitch with the navigation arrows and press “Delete”. Press “Delete” and keep it depressed for three seconds to delete the whole sequence.

To add another stitch to the sequence, go to the position where to add the stitch. Enter the stitch number and the new stitch will be added in succession.

Delete Button

Adjust a Stitch in the Sequence

Use the navigation arrows to select the stitch to be adjusted.

Adjust the stitch width and stitch length using the + and — buttons.

Navigation Arrows

Sew Out a Sequence

When you start sewing, the machine will sew one repetition of your sequence, sew 3 tie-off stitches and then stop automatically. Press the repeat button before starting to sew, to repeatedly sew the sequence.

Repeat Button

SEWING

Sewing

Next to each stitch or sewing technique described in this section of the manual is a chart showing the recommended settings and presser foot. See sample of the chart to the right.

The recommended settings are also shown on the display, but might need adjustment to fit a special technique.

Note: Some fabrics have a lot of excess dye which can cause discoloration on other fabric but also on your sewing machine. This discoloring may be very difficult or impossible to remove. Fleece and denim fabric in especially red and blue often contain a lot of excess dye. If you suspect that your fabric/ready-to-wear garment contains a lot of excess dye, always pre-wash it before sewing to avoid the discoloring.

Note: For best sewing result, use the same thread on top and bobbin. If sewing with specialty/decorative threads, use regular sewing thread in the bobbin.

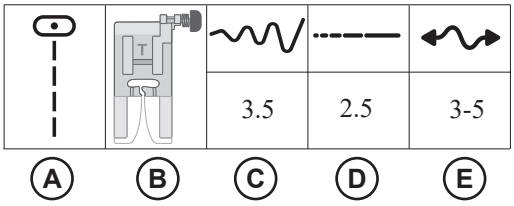

A. Stitch

B. Presser foot

C. Stitch length in mm

D. Stitch width in mm

E. Thread tension

Start to Sew – Straight Stitch

Set your machine for straight stitch (see chart to the right).

Raise the presser foot and position the fabric under it, next to a seam allowance guide line on the needle plate. On the bobbin cover there is a 1/4" (6mm) guide line.

Place the top thread underneath the presser foot.

Lower the needle to the point where you want to start. Bring the threads toward the back and lower the presser foot. Press the foot control. Gently guide the fabric along the seam guide letting the machine feed the fabric (A). If the bobbin thread isn't pulled up, it will be automatically as you start to sew.

Note: You can also start and stop your machine with the Start/Stop button.

To secure the beginning of a seam, press and hold the reverse button. Sew a few reverse stitches. Release the reverse button and the machine will sew forward again (B).

Note: You can also use the tie-off button to secure the stitch. Press the tie-off button before you start sewing, the machine sews three tie-off stitches and stops. Then continue sewing.

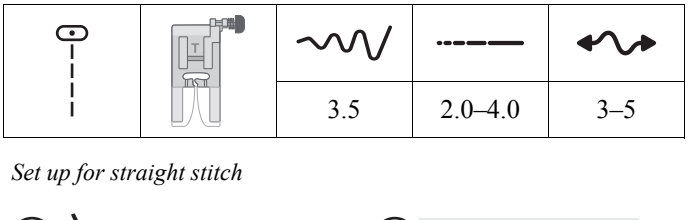

Set up for straight stitch

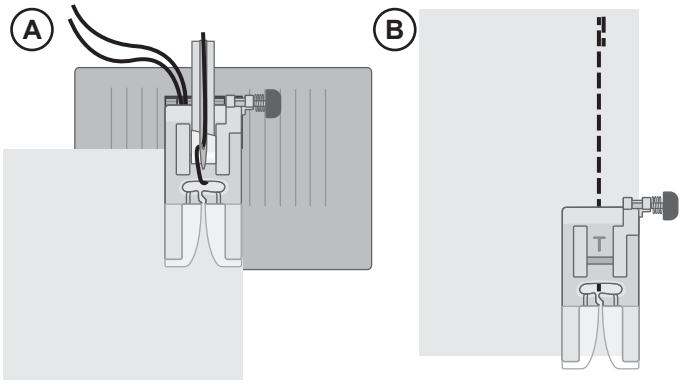

Change Needle Position

Some sewing is done more easily by changing the needle position, e.g., topstitching a collar or sewing in a zipper. The needle position is adjusted with the Stitch Width button (see page 19).

Change Sewing Direction

To change sewing direction, stop the machine. Press the Needle Stop button to activate the Needle Down position. The needle is brought down into the fabric.

Raise the presser foot.

Pivot the fabric around the needle to change sewing direction as desired. Lower the presser foot and continue sewing in the new direction.

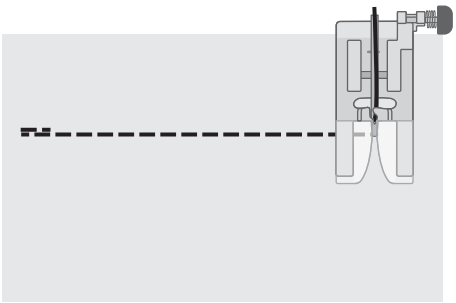

Finish Sewing

Press and hold the Reverse button and sew a few stitches in reverse when you reach the end of the seam. Release the button and sew forward again to the end of the seam. This will secure the seam so the stitches don't unravel.

Turn the handwheel toward you to raise the needle to its highest position. Raise the presser foot and remove the fabric, pulling the threads to the back.

Pull the threads up and into the thread knife so that the threads are cut the proper length and your needle won't come unthreaded when you start the next seam.

Note: You can also use the Tie-Off button to secure the stitch at the end of the seam. Just before you reach the end of your project, press the Tie-Off button. The machine sews three stitches and stops automatically.

Straight Stretch Stitch

This stitch is stronger than regular straight stitch, due to the fact that it is a triple and elastic stitch. The Straight Stretch Stitch can be used for heavy stretch fabrics, for crotch seams which are subject to considerable strain and for topstitching heavy fabrics.

Carefully guide the fabric while sewing as the fabric moves back and forth.

		3.5	2.5	3–5

Set up for Straight Stretch Stitch

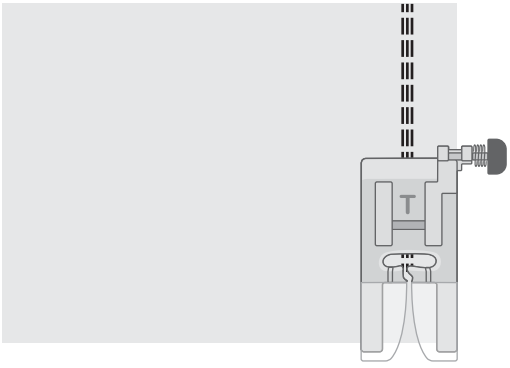

Multi-Step Zigzag Stitch

Multi-step zigzag stitch is used to overcast raw edges. Make sure the needle pierces the fabric on the left side and overcasts the edge on the right side.

The stitch can also be used as an elastic stitch to allow seams to stretch when sewing knit fabrics.

		3.0–5.0	1.0	3–5

Set up for multi-step zigzag stitch

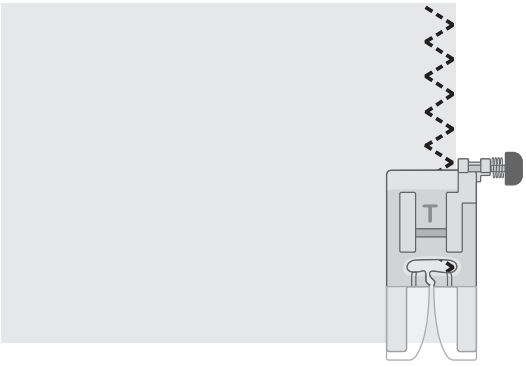

Slant Overedge Stitch

The slant overedge stitch sews the seam and overcasts the edge all at one time, perfect for stretch fabrics. This stitch is more elastic than normal seams, very durable and quickly sewn.

Place the fabric under the presser foot aligning the edge of the presser foot with the edge of the fabric. Once the seam is finished, trim excess fabric outside the seam.

Tip: Use the Blind Hem foot to sew at the very edge of the fabric. Adjust the extension on the foot, and let it guide along the fabric edge. Always test sew on a piece of scrap fabric first, the result might vary due to the fabric weight and quality.

		5.0	2.5	3–5

Set up for slant overedge stitch

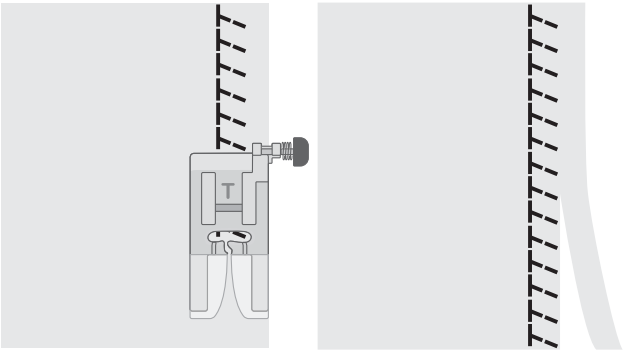

Closed Overlock Stitch

The closed overlock stitch can be used for sewing medium to heavier weight stretch fabrics.

Use this stitch to hem stretch fabrics (A) and for belt loops (B). Fold a hem to the wrong side and stitch with closed overlock stitch from the right side. Trim away excess fabric.

		5.0	2.5	3–5

Set up for closed overlock stitch

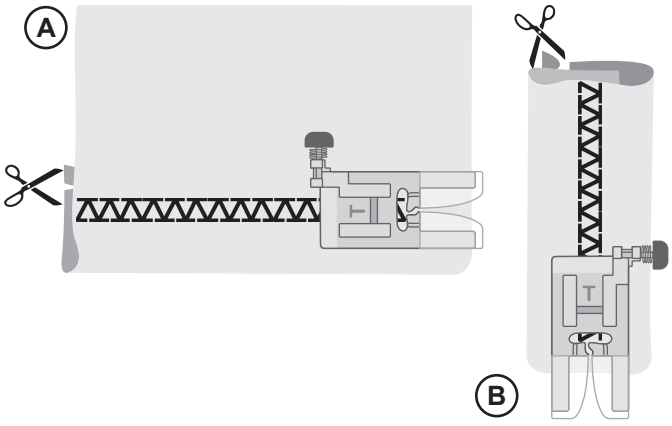

Blind Hems

The blind hem stitch is used to make invisible hems on skirts, trousers and home décor projects. There are two types of blind hem; one is recommended for medium to heavy woven fabric (1), the other for medium to heavy stretch fabric (2).

(1)	(2)		3.50	1.5–2.0	3–5

Set up for blind hem

- Finish the raw edge of the hem if sewing on a woven fabric. There is no need to finish the raw edge first on most knits.
- Fold and press the hem allowance to the wrong side.
- Fold the hem back on itself so approximately 3/8" (1 cm) of the finished edge extends beyond the fold. The wrong side of your project should now be facing up.
- Place the fabric under the presser foot so that the fold runs along edge guide (A).
- When the needle swings into the fold it should catch a small amount of fabric. If the stitches are visible on the right side, adjust edge guide (A) by turning the adjusting screw (B) until the stitch that catches the hem just barely shows.

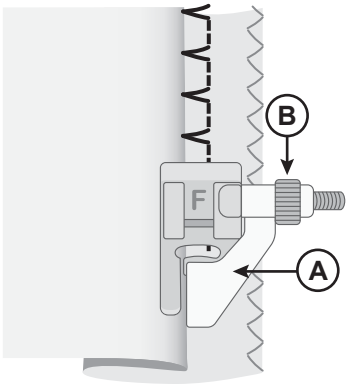

Woven fabric

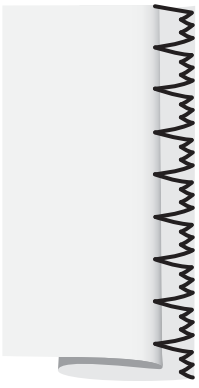

Stretch fabric

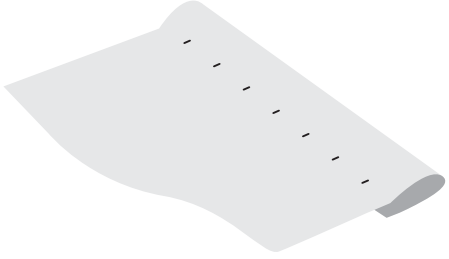

Right side of fabric

Darning and Mending

Repair Large Holes

To cover large holes it is necessary to sew a new piece of fabric onto the damaged area.

Baste the new piece of fabric onto the damaged area on the right side of the fabric.

Sew over the fabric edges with the zigzag or the multi-step zigzag stitch.

Trim the damaged area close to the seam from the wrong side of the fabric.

		4.0–6.0	2.0	3–5

Set up for zigzag

		5.0	1.0–2.0	3–5

Set up for multi-step zigzag

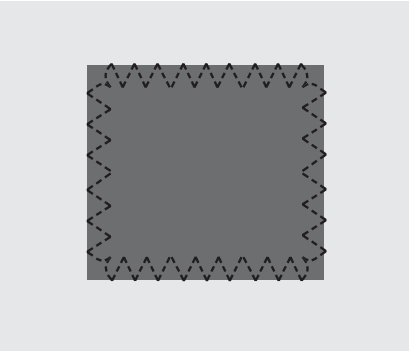

Repair Tears

On tears, frayed edges or small holes it is useful to lay a piece of fabric on the wrong side of the fabric. The underlayed fabric reinforces the damaged area.

Lay a piece of fabric underneath the damaged fabric. It must be a little larger than the damaged area.

Sew over the damaged area using the zigzag or multi-step zigzag stitch.

Trim the piece of fabric used as reinforcement.

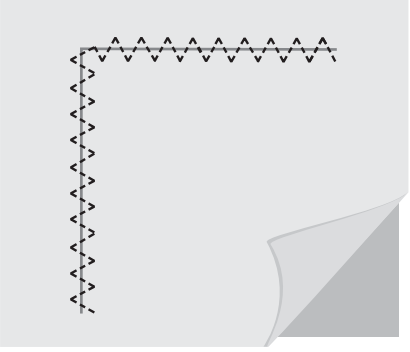

Repair Small Holes

A small hole or tear is easily darned with the darning stitch. This stitch automatically sews small stitches back and forth to cover small holes or tears.

Thread your machine with a thread in a color as close to your fabric as possible.

1. Select the Darning Stitch.
2. The darning stitch is used together with the Buttonhole Foot. Measure the length of the tear/hole. Push the button holder lever (A) out to the corresponding length. The distance between the button holder lever and the stopper (B) is the approximate length of the darning stitch. The maximum length is approximately 1 1/4” (3cm) (If the tear is longer, repeat the stitch).
3. Attach the Buttonhole Foot to your machine. Place your fabric under the presser foot. Align the fabric so that the bottom of the tear is slightly above the center of the presser foot (C).
4. Lower the Buttonhole Lever (D) all the way down, and push it away from you. The Buttonhole Lever should fit between the button holder lever (A) and the stopper (B).
5. Start sewing, the machine will stop automatically once the darning stitch is completed. Move your fabric and repeat until the whole damaged area is covered.

Note: To make the darning even sturdier, place a fabric underneath the hole/tear before sewing.

		7.0	2.0	2–4

Set up for darning stitch

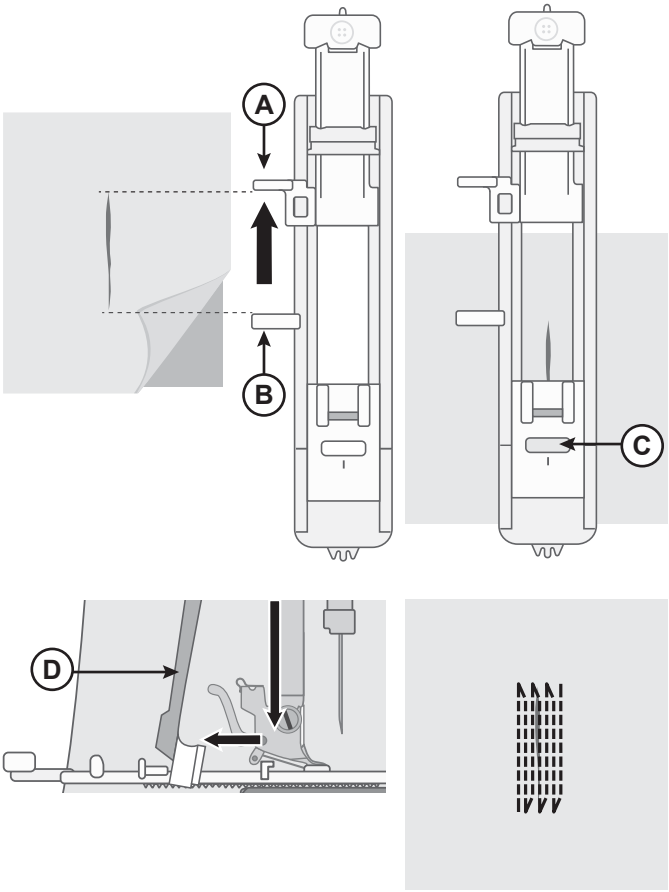

Jeans Hem

When sewing over seams in extra heavy fabric or a jeans hem, the presser foot may tip as it rides over the seam. To be able to obtain even feed also over thicker seams, the All-Purpose Foot (T) is equipped with a “lock in place” button, that locks the foot in a horizontal position.

As you approach the thicker seam and the presser foot begins to raise over the thickness, stop sewing. Lower the needle into the fabric and raise the presser foot. As you lower the presser foot again, push the button on the presser foot towards the groove (A) in the presser foot ankle. This will lock the foot in a horizontal position, allowing the foot to pass the thick parts without needle breakage. The lock position will release automatically after a few stitches.

		3.5	4.0	3–5

Set up for jeans hem

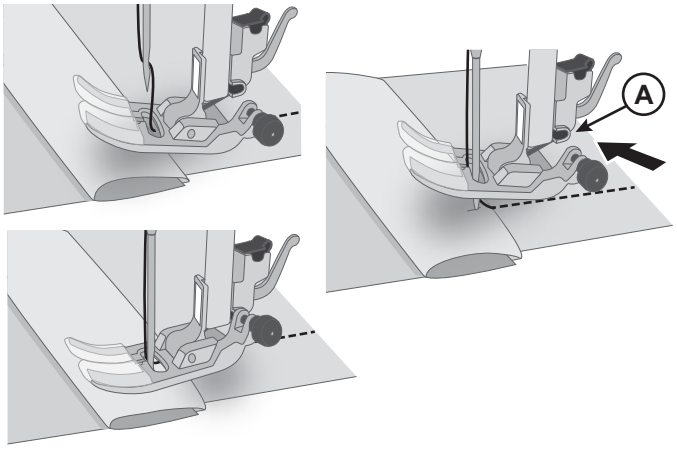

Button Sewing

Fasten buttons easily and quickly with the special button sewing stitch.

1. Select the Button Sewing Stitch.
2. Lower the feed teeth.
3. Attach the Button Sewing Foot to your machine.
4. Mark the placement of the button with a marking pen (A).
5. Place your project under the presser foot, place the button under the foot aligning it with the marking on the fabric. Lower the presser foot (B).
6. Turn the handwheel toward you very slowly to be sure the needle clears the holes. Adjust the stitch width if needed (C).
7. Start sewing at a low speed. The machine stops automatically after a few stitches.
8. Leave a long thread tail and pull it under the button. Wind the thread tail around the shank.
9. Use a hand sewing needle to pull the thread to the wrong side of the fabric and secure.
10. To re-engage the feed teeth, move the Feed Teeth Lever back to regular sewing position, and then turn the hand wheel toward you one full revolution.

		3.5	—	2–4

Set up for button sewing

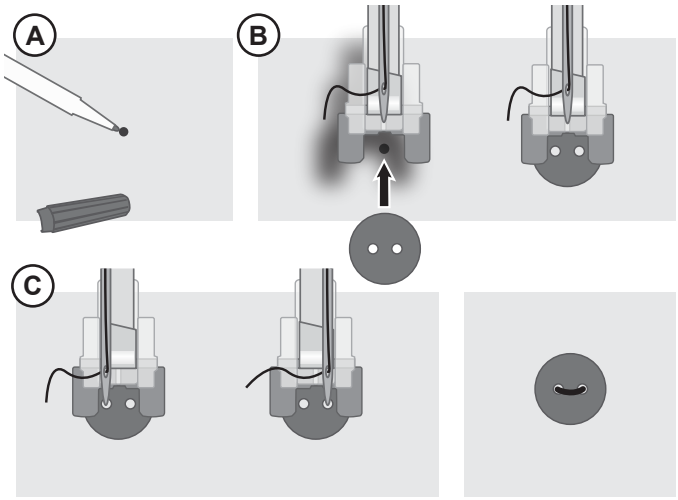

One-Step Buttonhole

Sew buttonholes perfectly sized for your button. The fabric should be interfaced and/or stabilized where buttonholes are to be sewn.

1. Mark the start position of the buttonhole on the fabric (A).
2. On the One-Step Buttonhole Foot, push the button holder open by pushing the lever backwards (B). Insert the button. Push the button holder forward until the button is locked in place (C). The button will determine the length of the buttonhole. The distance between the button holder lever (B) and the stopper (D) is the length of the buttonhole.
3. Attach the One-Step Buttonhole Foot.
4. Make sure that the thread is pulled though the hole in the presser foot and placed under the foot.
5. Position your fabric under the presser foot so that the marking on the fabric is aligned with the center of the Buttonhole Foot (E).
6. Lower the Buttonhole Lever (F) all the way down, and push it away from you. The buttonhole lever should fit between the button holder lever (B) and the stopper (D).
7. Hold the end of the upper thread and start sewing. The buttonhole is sewn from the front of the presser foot to the back. Stop sewing when the buttonhole is finished.
8. Once the buttonhole is finished, raise the presser foot. Push the buttonhole lever all the way up.
9. To secure the bartack, thread the end of the top thread into a hand sewing needle, pull to the wrong side and tie the end before cutting excess thread.
10. Use a seam ripper and cut the buttonhole open from both ends towards the middle (G).

If you want to sew another buttonhole, do not push the buttonhole lever up when the buttonhole is finished. Instead, push it away from you again. Sew another buttonhole.

Note: Always sew a test buttonhole on a piece of scrap fabric.

		5.0	0.4	3–5

Set up for buttonhole

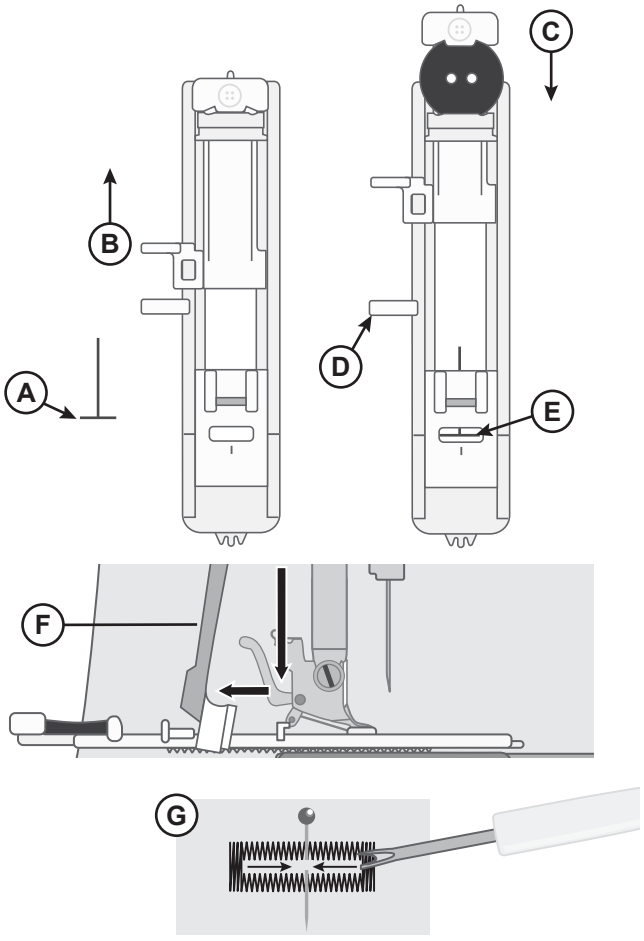

Sew Zippers

The Zipper Foot can be attached on either the right or the left of the needle, making it easy to sew both sides of the zipper.

To sew the right side of the zipper, attach the foot in the left presser foot position (A).

To sew the left side of zipper, attach the foot in the right presser foot position (B).

		3.5	2.0–3.0	3–5

Set up for sewing zippers

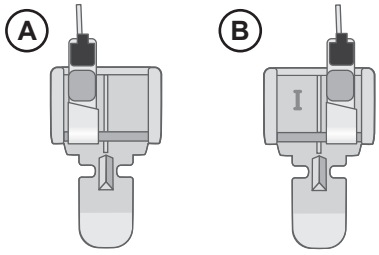

Centered Zipper

- Place the fabric pieces right sides together and pin. Mark the zipper length on your fabric.
- Baste the zipper seam using the specified seam allowance (use straight stitch with stitch length 4mm, thread tension 2). Baste to the end of zipper marking (C).
- Set up the machine for straight stitch (see table above), backstitch a few stitches and sew the rest of the seam using the specified seam allowance (C).
- Press the seam allowances open. Place the right side of the zipper to the wrong side of the seam, tape in place (D).
- Flip your project, making sure that the right side is facing up. Snap on the Zipper Foot, to the left side of the needle (A).
- Sew along the right side of the zipper to the end of your zipper, remember to backstitch in the beginning. Stop with the needle down in the fabric, lift the presser foot and turn your project to sew across the bottom of the zipper (E).
- Attach the Zipper Foot to the right side of the needle (B). Sew the remaining zipper side as you did with the first side (F).
- Flip your project to remove the tape on the back side.
- Flip your project to the right side again and remove the basting stitches.

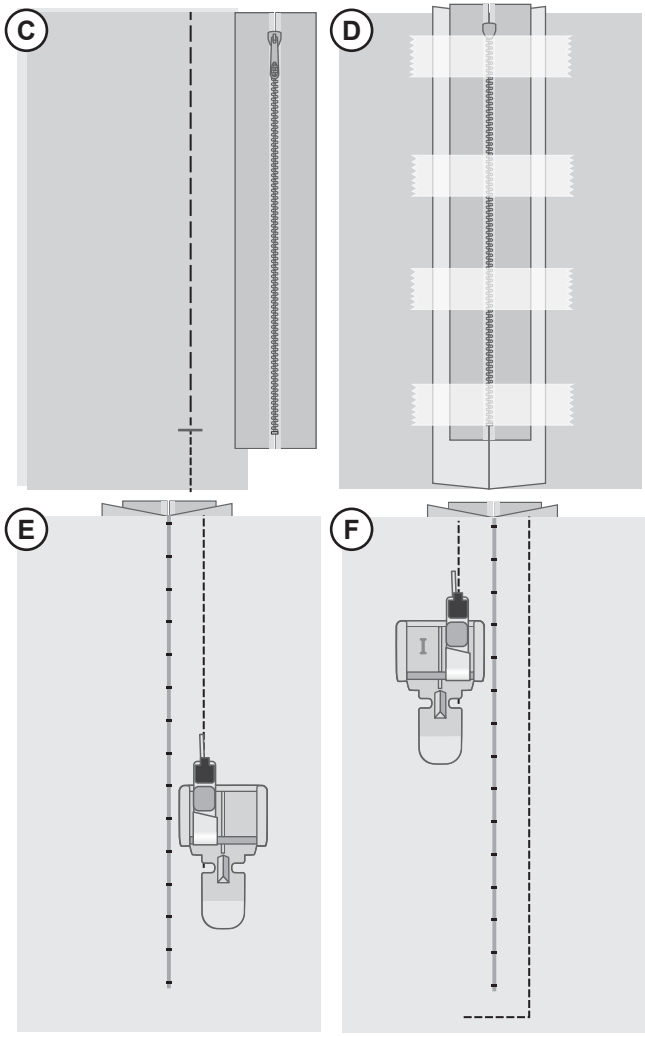

Hand-Look Quilt Stitch

Simulate the look of handmade quilting with the Hand-look Quilting stitch. Thread the needle with either transparent thread or with a thread that blends with the color of the top of the fabric. Thread the bobbin with a thread color that coordinates or contrasts with the top of the fabric, depending on the look you want for your project (the bobbin thread will actually appear on the top of the fabric).

Tip: Use a size 100 Topstitch Needle for an even greater effect.

- To get the accurate hand stitched look it is important that the stitch is sewn using a high thread tension. Make sure to set the tension according to the recommendations in the stitch chart.
- Stitch along one of the seams of your project, or around an appliqué. The handlook effect is created as the bobbin thread is pulled up to the top of the quilt.
- Use the quilting guide to make even rows of channel quilting or echo quilting as illustrated. Insert the Edge/ Quilting Guide into the groove at the back of the presser foot holder and adjust the position to fit your project.

		3.5	2.0–3.0	6–9

Set up for hand-look quilt stitch

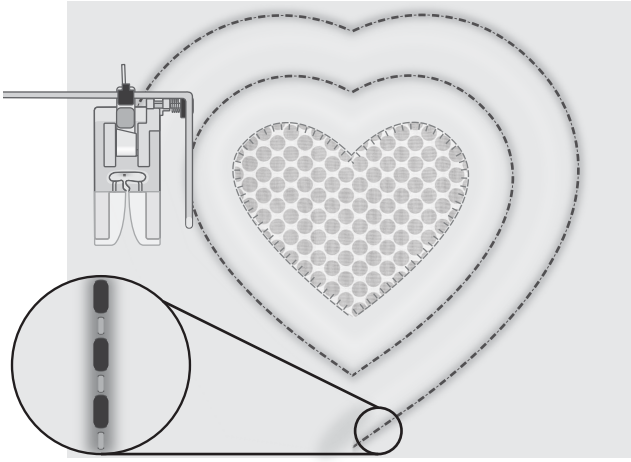

MAINTENANCE

Cleaning the Machine

To keep your sewing machine operating well, clean it often. No lubrication (oiling) is needed. Wipe the exterior surface of your machine with a soft cloth to remove any dust or lint built up.

Cleaning the Bobbin Area

⚠ *Raise the needle and turn off the machine.*

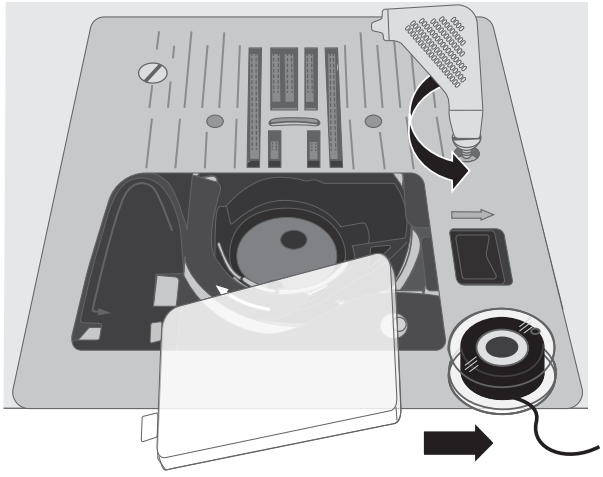

Remove the presser foot. Slide off the bobbin cover and remove the bobbin.

Remove the screws in the needle plate by using the L-screwdriver. Lift up and remove the needle plate.

Clean the feed teeth and the bobbin area with the brush found among the accessories.

Place the needle plate over the feed teeth, replace and tighten the screws.

Attach the presser foot, insert the bobbin and replace the bobbin cover.

Cleaning under the Bobbin Area

⚠ *Raise the needle and turn off the machine.*

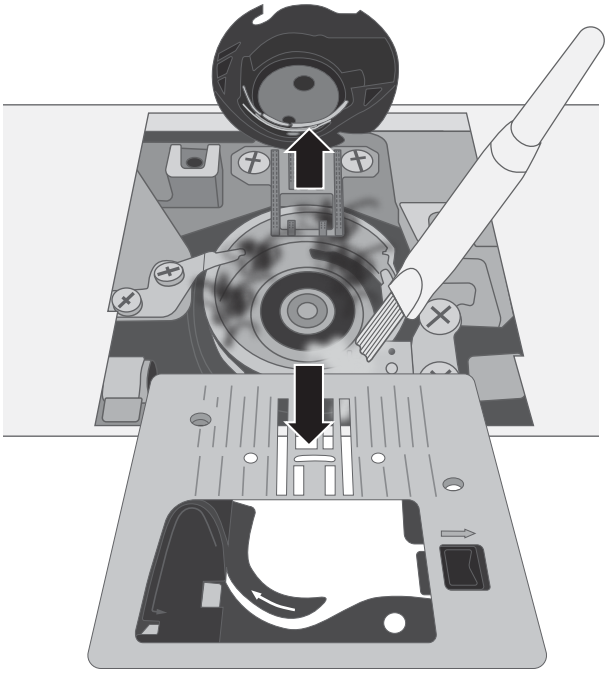

Clean the area under the bobbin case after sewing several projects or any time you notice an accumulation of lint in the bobbin case area.

Remove the presser foot. Slide off the bobbin cover and remove the bobbin.

Remove the screws in the needle plate by using the L-screwdriver. Lift up and remove the needle plate.

Remove the bobbin case by lifting it up. This is easier if you push it slightly to the left or right as you lift.

Clean the area with the brush or with a dry cloth.

Note: Do not blow air into the bobbin case area. The dust and lint will be blown into your machine.

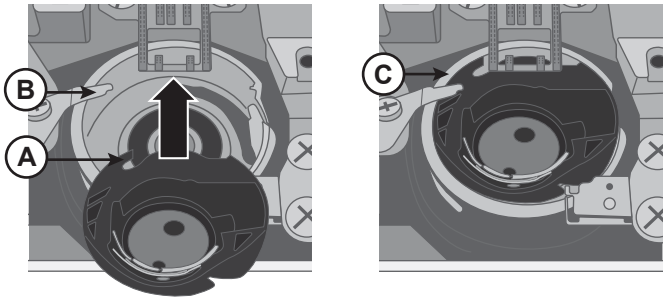

Guide the “forked” end of the bobbin case (A) under the bobbin case holder (B) and under the feed teeth. Move the bobbin case slightly from right to left until it slips correctly into the hook race (C). To make sure the bobbin case is properly replaced, turn the handwheel towards you. The hook race (C) should rotate freely in a counter-clockwise direction.

Place the needle plate over the feed teeth, replace and tighten the screws.

Attach the presser foot, insert the bobbin and replace the bobbin cover.

Troubleshooting

Thread Loops on Underside of Fabric

Possible cause: Thread looping on the underside of the fabric is always an indication that the upper thread is not correctly threaded. This happens when the upper thread is not correctly placed in the thread tension mechanism and has not been threaded through the take up lever.

Solution: *Rethread the machine, making sure to first raise the presser foot lifter before starting to thread, so thread can be properly seated in the tension mechanism and take up lever. To know if you have rethreaded the machine correctly, try this test:*

- *Raise the presser foot lifter (page 10) and thread the top of the machine (page 13).*
- *Thread the needle, but don't put the thread under the presser foot yet. As you pull the upper thread to the left, it should pull freely.*
- *Put the presser foot lifter down. As you pull the upper thread to the left, you should feel resistance. This means you are threaded correctly.*
- *Put the thread under the presser foot, and then draw up the bobbin thread. Slip both thread tails under the presser foot towards the back. Lower the presser foot and begin sewing.*

If you put the presser foot lifter down, but the thread still pulls freely (you feel no difference whether the presser foot is up or down), this means that you have threaded incorrectly. Remove the upper thread and rethread the machine.

Bobbin Thread Breaking

Possible cause: Bobbin threaded incorrectly.

Solution: *Check that bobbin is placed correctly in the bobbin holder (page 12).*

Possible cause: Bobbin wound too full or unevenly.

Solution: *Bobbin thread may not have been correctly placed into bobbin winding tension disc during the bobbin winding process (page 12).*

Possible cause: Dirt or lint in bobbin holder.

Solution: *Clean bobbin holder (page 34).*

Possible cause: Wrong bobbins being used.

Solution: *Use bobbins that are the same style as those that come with the machine (SINGER® Class 15 transparent bobbins) – don't substitute.*

Bobbin Thread Showing on Top of Fabric

Possible cause: Top thread too tight.

Solution: *Reduce upper thread tension (page 16).*

Possible cause: Thread path is obstructed, putting extra tension on top thread.

Solution: *Check that the top thread path is not obstructed and thread is moving freely through the thread path.*

Possible cause: Bobbin thread not in bobbin case tension.

Solution: *Rethread bobbin (page 12).*

Bobbin Winding Difficulties

Possible cause: Bobbin thread loosely wound on bobbin.

Solution: *Rewind bobbin, making sure that the thread is placed snuggly in the bobbin winding tension disc (page 12).*

Possible cause: Bobbin winding spindle not fully engaged, therefore bobbin not winding.

Solution: *Check that the bobbin winding spindle has been fully engaged before starting to wind.*

Possible cause: Bobbin is winding sloppily because thread end not held at beginning of winding process.

Solution: *Before starting to wind, hold the thread tail (coming out of the bobbin) securely, allow the bobbin to partially fill, then stop to trim the thread tail close to the bobbin.*

Fabric Puckers

Possible cause: Top thread is too tight.

Solution: *Reduce top thread tension (page 16).*

Possible cause: Stitch length is set too short.

Solution: *Increase stitch length setting (page 19).*

Possible cause: Wrong style needle for fabric type.

Solution: *Use correct needle style and size for your fabric (page 14 and page 15).*

Fabric Is Tunneling Under Stitches

Possible cause: Fabric is not properly stabilized for the density of the stitches (for example, satin stitch applique).

Solution: *Add a fabric stabilizer underneath the fabric to help keep the stitches from tunneling in together, forming a puckered ridge in fabric.*

Loud Noise When Sewing

Possible cause: Thread not in take-up lever.

Solution: *Rethread the machine, making sure the take up lever is in its highest position so thread goes in the eye of the take up lever — turn machine hand wheel toward you to raise the take up lever to its highest position for threading.*

Possible cause: Thread path is obstructed.

Solution: *Check that thread is not caught on the thread spool or behind the spool cap.*

Machine is Not Feeding Fabric

Possible cause: Presser foot lifter has not been lowered onto fabric after threading.

Solution: *Lower the presser foot lifter before starting to sew. Don´t "push" or "pull" the fabric as you sew.*

Possible cause:

Solution: *The feed teeth need to be raised and re-engaged by turning the handwheel one full revolution (page 16).*

Possible cause: Stitch length is set at zero.

Solution: *Increase stitch length setting (page 19).*

Machine Will Not Run

Possible cause: Bobbin winding spindle is engaged when you try to sew.

Solution: *Disengage bobbin winding spindle by pushing it to the left.*

Possible cause: Power cord and/or foot control not plugged in correctly.

Solution: *Make sure power cord/foot control are correctly seated in machine and power supply (page 9).*

Possible cause: Wrong bobbins being used.

Solution: *Use bobbins that are the same style as those that come with the machine (SINGER® Class 15 transparent bobbins)– don't substitute.*

Needles Breaking

Possible cause: Bent, dull or damaged needle.

Solution: *Discard needle, insert new needle (page 15).*

Possible cause: Wrong size needle for fabric.

Solution: *Insert appropriate needle for fabric type (page 14).*

Possible cause: Machine not threaded correctly.

Solution: *Rethread the machine completely (page 13).*

Possible cause: "Pushing" or "pulling" fabric.

Solution: *Don't manually push/pull fabric in order to sew, but allow the machine's feed teeth to draw fabric under the presser foot as you guide it.*

Needle Threader Not Working

Possible cause: Needle not in correct position.

Solution: *Raise needle to its highest position by turning hand wheel toward you.*

Possible cause: Needle inserted incorrectly.

Solution: *Needle all the way up in the needle clamp.*

Possible cause: Needle is bent.

Solution: *Remove the bent needle, insert new needle (page 15).*

Possible cause: Hook pin damaged.

Solution: *Needle Threader needs replacement. Contact authorized service center.*

Skipping Stitches

Possible cause: Needle inserted incorrectly.

Solution: *Check that flat side of needle top is toward back of machine and needle is up as far as it can go, then tighten needle clamp screw.*

Possible cause: Wrong needle for fabric sewn.

Solution: *Use correct needle style and size for your fabric (page 14 and page 15).*

Possible cause: Bent, dull or damaged needle.

Solution: *Discard needle and insert new needle (page 15).*

Stitches Distorted

Possible cause: "Pushing" or "pulling" the fabric.

Solution: *Don't manually push/pull fabric in order to sew, but allow the machine's feed teeth to draw fabric under presser foot as you guide it.*

Possible cause: Incorrect stitch length setting.

Solution: *Adjust stitch length setting (page 19).*

Possible cause: Stabilizer may be needed for technique.

Solution: *Place stabilizer underneath fabric.*

Thread Bunching at Beginning

Possible cause: Top and bobbin threads have not been properly placed underneath presser foot before starting to sew.

Solution: *Ensure that both the top thread and the bobbin thread are under the presser foot and toward the back before starting to sew.*

Possible cause: Sewing was started with no fabric under the presser foot.

Solution: *Place fabric under foot, making sure that needle comes down into fabric; lightly hold both thread tails for first few stitches.*

Possible cause: Stabilizer may be needed for technique.

Solution: *Place stabilizer underneath fabric.*

Upper Thread Breaking

Possible cause: Thread path obstructed

Solution: *Check if thread is caught on thread spool (rough spots on the spool itself) or behind spool pin or spool cap (if the thread has fallen behind the spool cap and therefore cannot feed freely through the machine path).*

Possible cause: Machine is not threaded correctly.

Solution: *Remove upper thread completely, raise presser foot lifter, rethread machine making sure thread is in take-up lever (raise take up lever to its highest position by turning hand wheel toward you.*

Possible cause: Upper tension too tight.

Solution: *Reduce upper thread tension (page 16).*

Technical Specification

Sewing Speed Maximum 1000 ± 50 rpm *(using straight stitch with default stitch length)*	**Rated Voltage** 240 V/50Hz, 230 V/50Hz, 220 V/50-60Hz, 127 V/60 Hz, 120 V/60 Hz, 100V/50-60Hz	**Presser Foot Rise Height** 6mm
Protection Class II (Europe)	**Stitch Width** 0–7.0mm	**Stitch Length** 0–4.5mm
Type of Lamp LED light	**Machine Dimensions** Length: ≈440mm Width: ≈190mm Height: ≈280mm	**Weight** 7kg

We reserve the right to change the machine equipment and the assortment of accessories without prior notice, or make modifications to the performance or design. Such modifications, however, will always be to the benefit of the user and the product.

INTELLECTUAL PROPERTY

Singer, and the Cameo “S” Design are exclusive trademarks of The Singer Company Limited S.à.r.l. or its Affiliates.

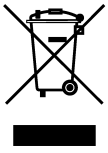

Please note that on disposal, this product must be safely recycled in accordance with relevant National legislation relating to electrical/electronic products. Do not dispose of electrical appliances as unsorted municipal waste, use separate collection facilities. Contact your local government for information regarding the collection systems available. When replacing old appliances with new ones, the retailer may be legally obligated to take back your old appliance for disposal free of charge.

If electrical appliances are disposed of in landfills or dumps, hazardous substances can leak into the groundwater and get into the food chain, damaging your health and well-being.

Manufacturer
VSM GROUP AB, **SVP Worldwide**
Drottninggatan 2, SE-56184, Huskvarna, SWEDEN

SINGER®

ORIGINAL SINCE 1851.

4710719-26F · English · © 2020 The Singer Company Limited S.à.r.l. or its Affiliates. · All rights reserved