Form 30-014G (863)

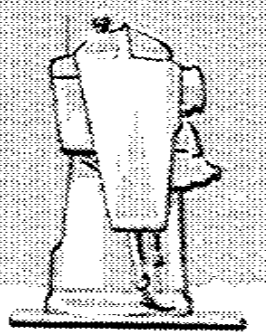

SINGER*

Sewing Machine

411*

THE SINGER COMPANY

* A Trademark of THE SINGER COMPANY Printed in Western Germany

2

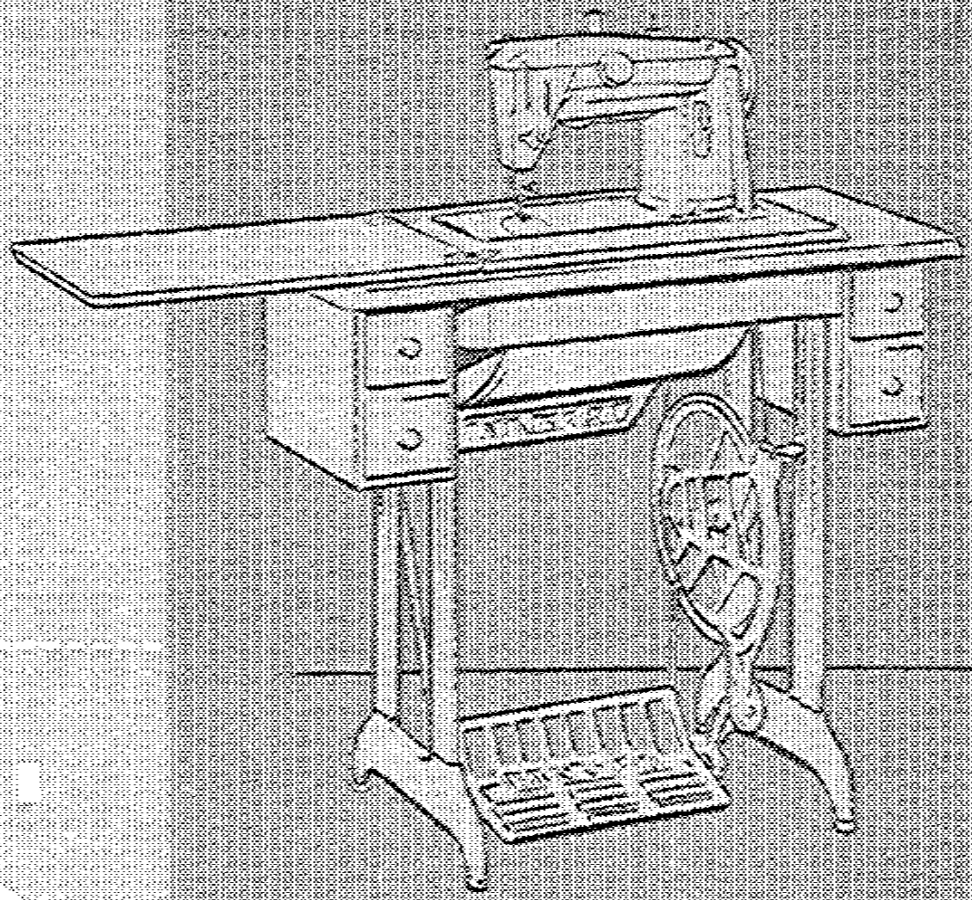

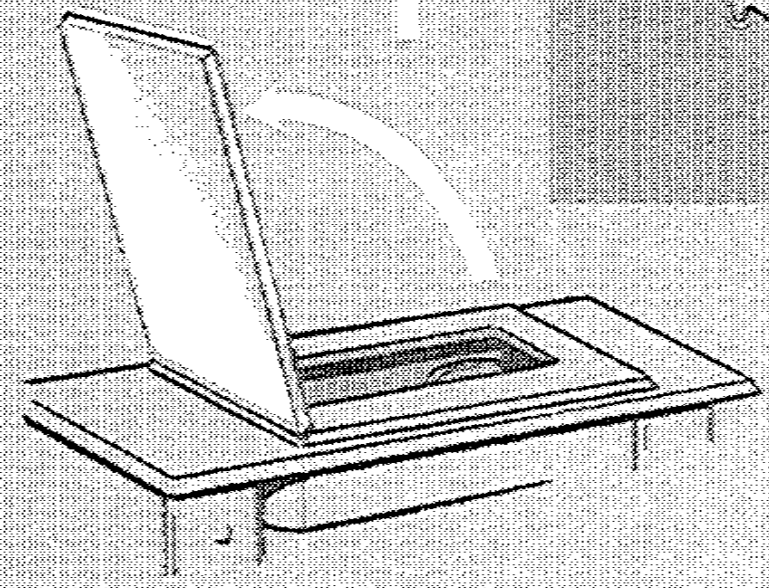

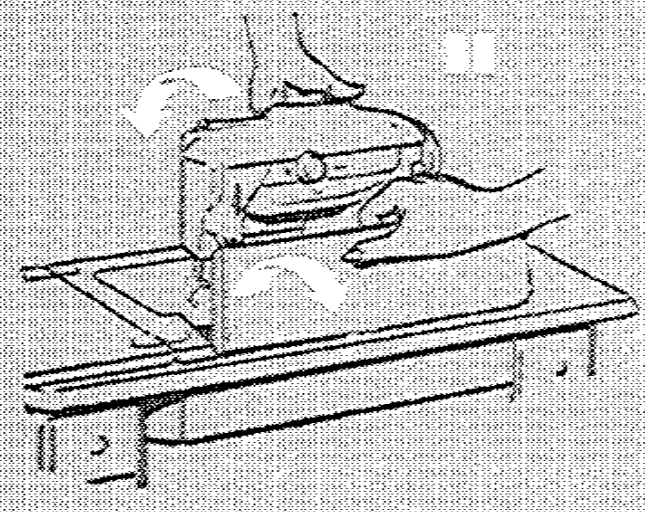

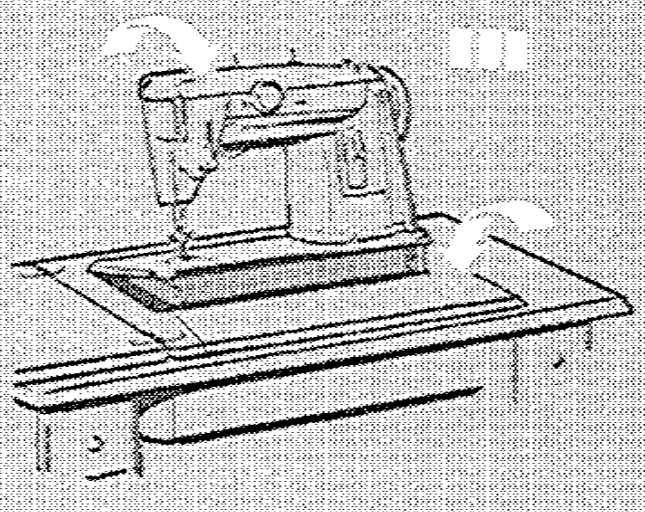

16
X1
Y

7
A
K
3
15
20
12
8
6
1
2
3
4

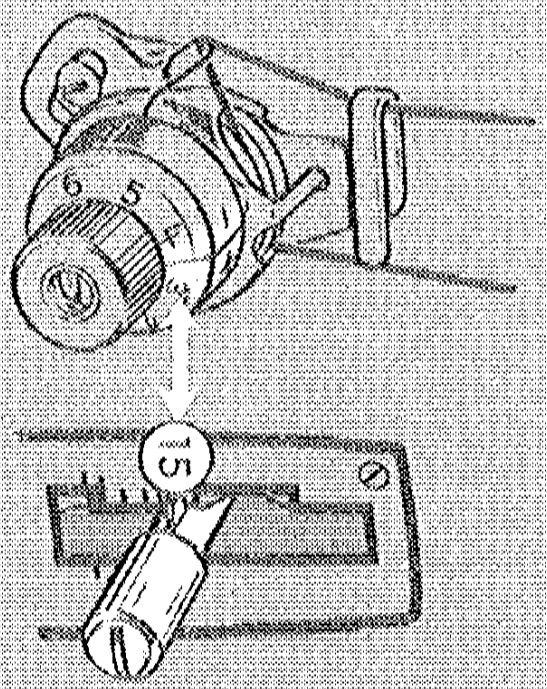
6
5
4
3
2
1
5
6

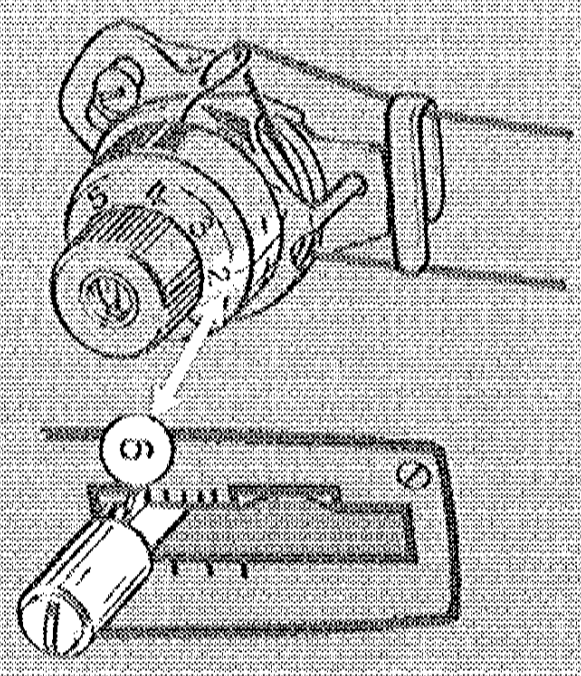
5
4
3
2
1
6
6

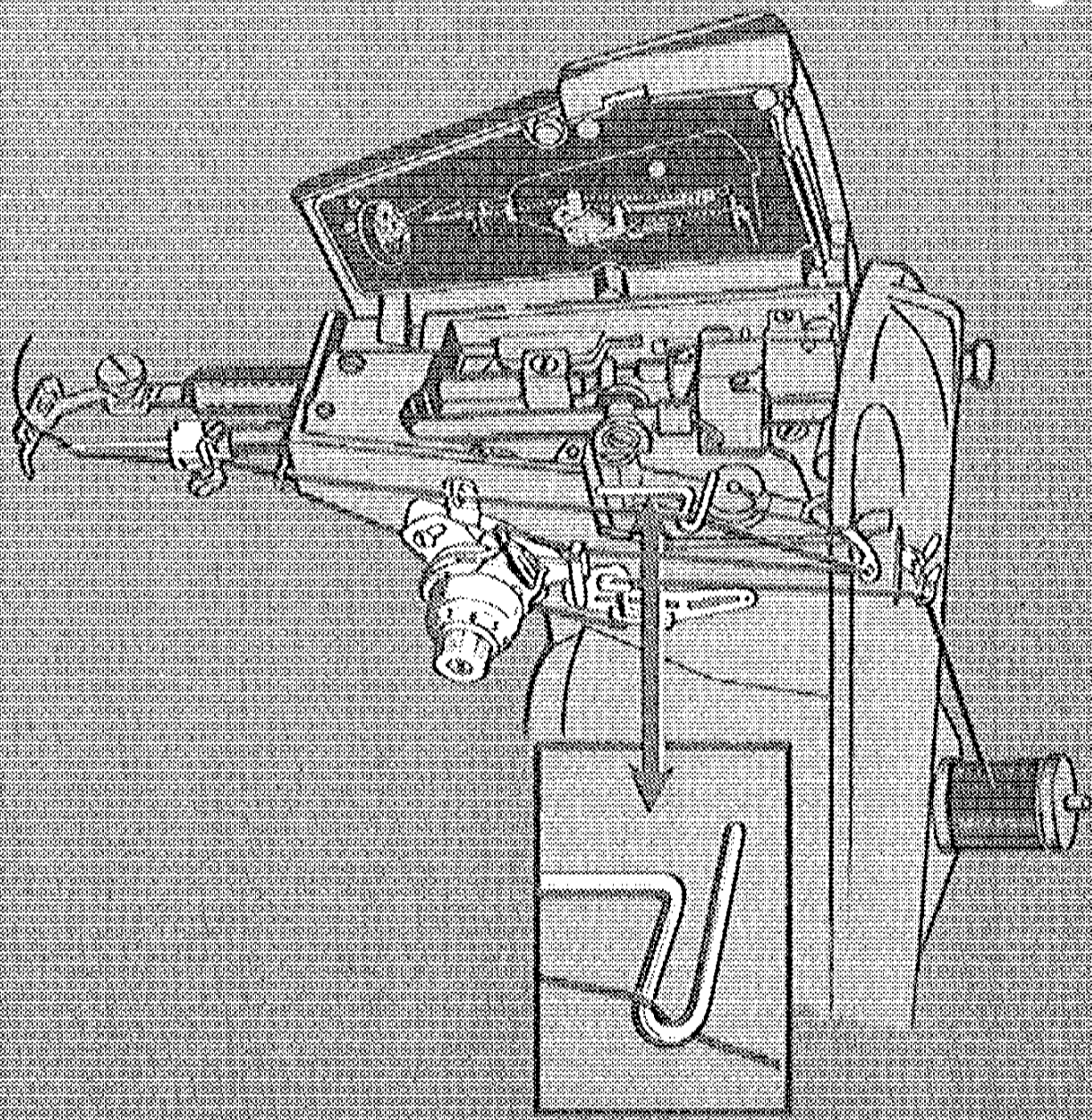

I
II

I
I
II
I
II
I

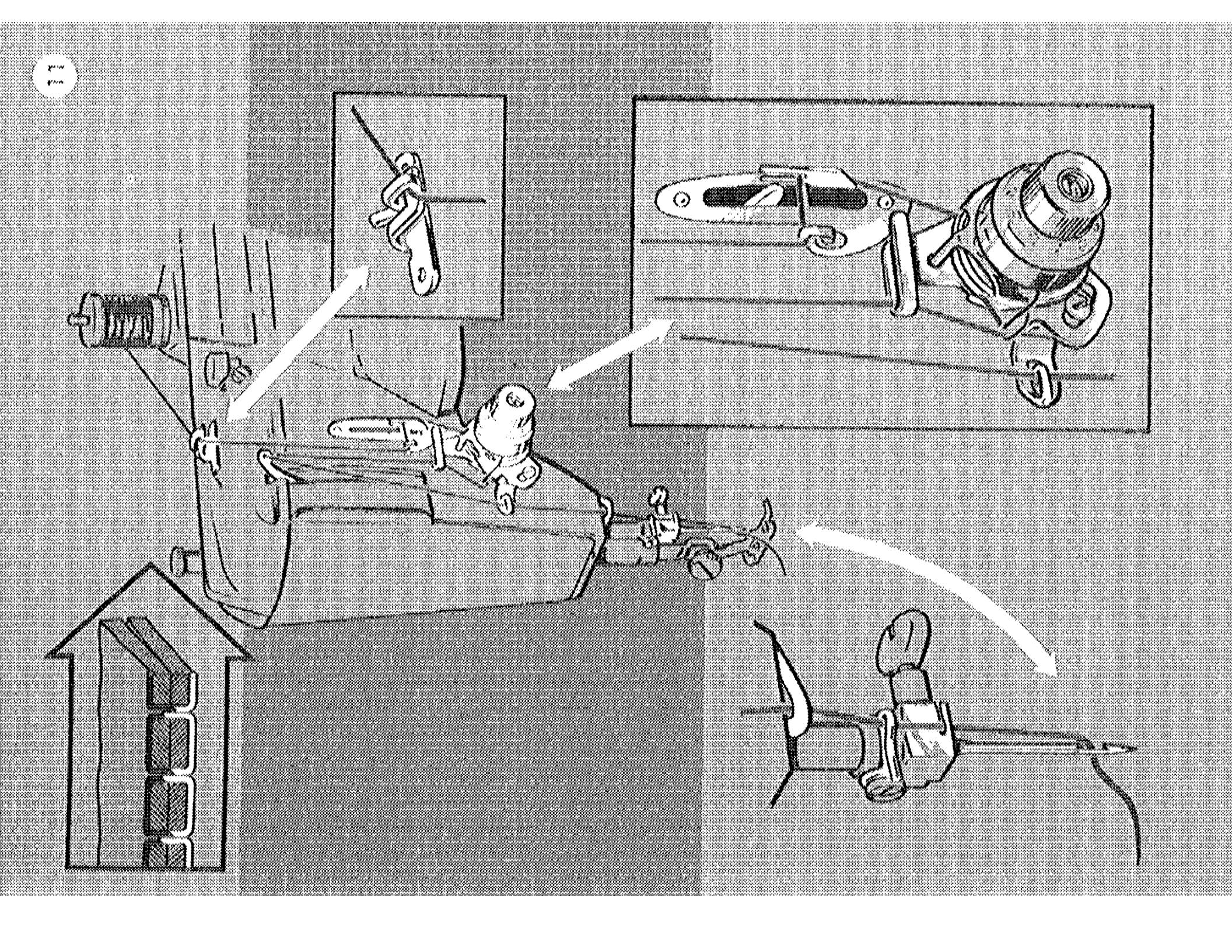

3456
0
3
1
5
3456
AK3
3
0
5
0

20
12
8
6

6

12

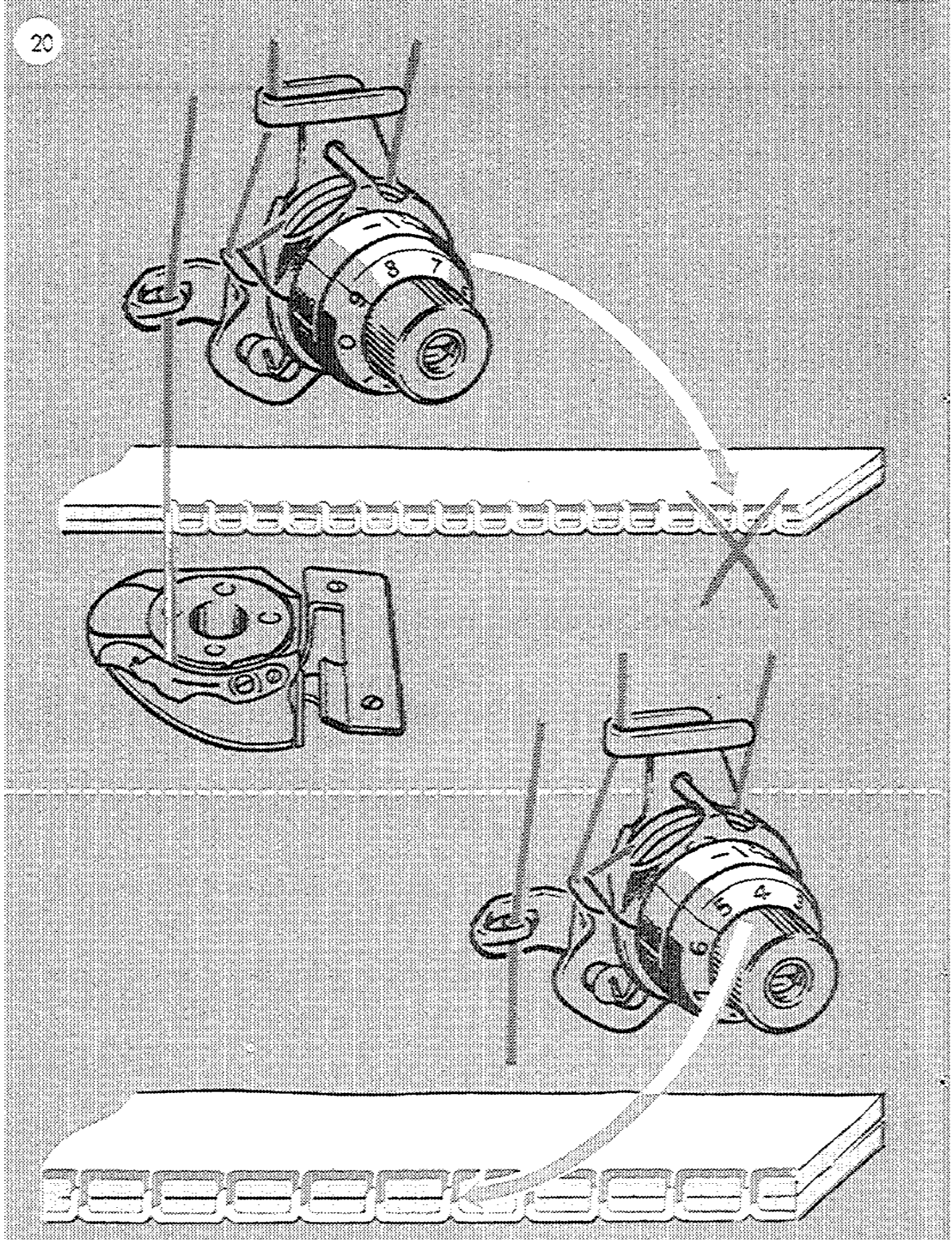

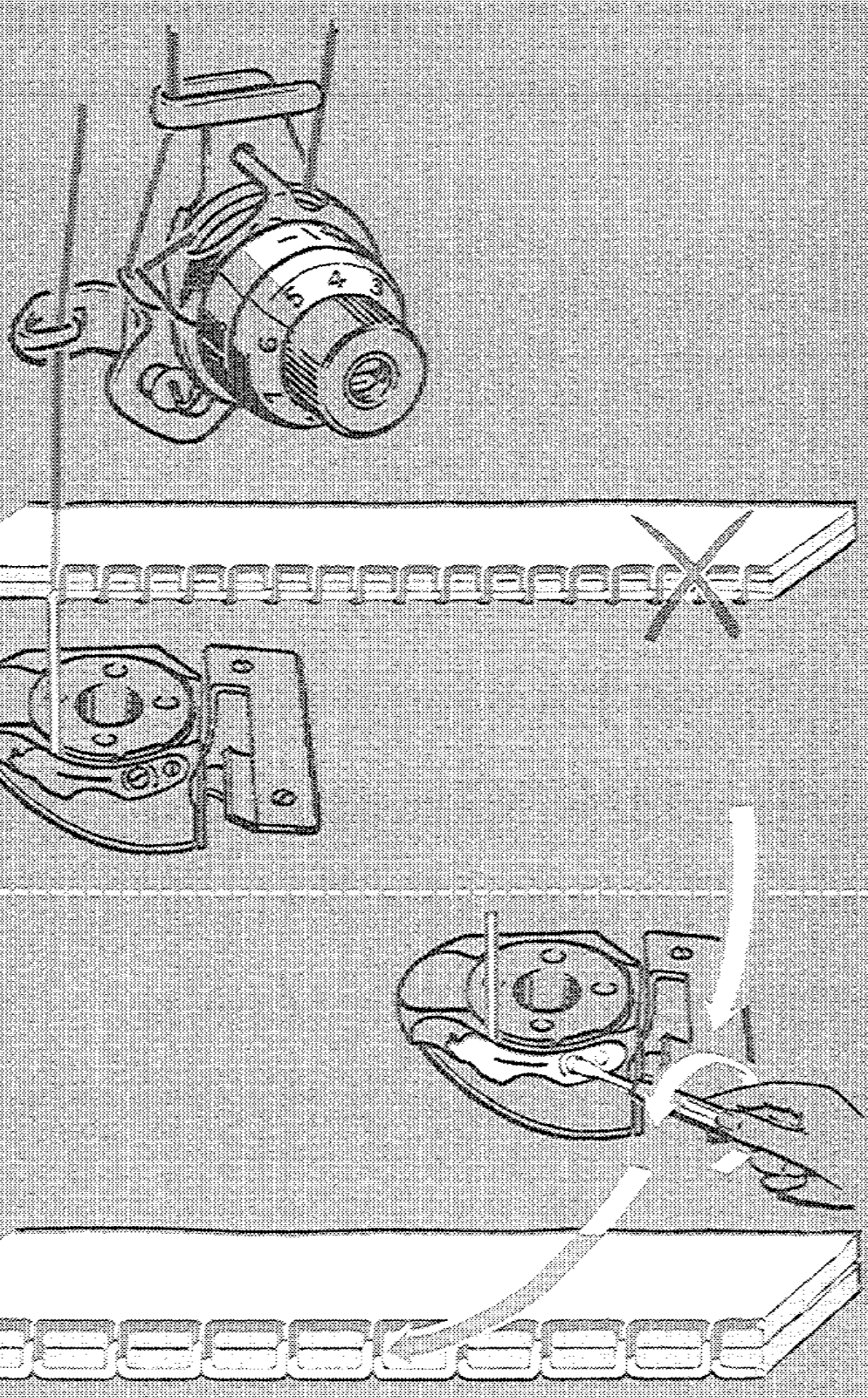

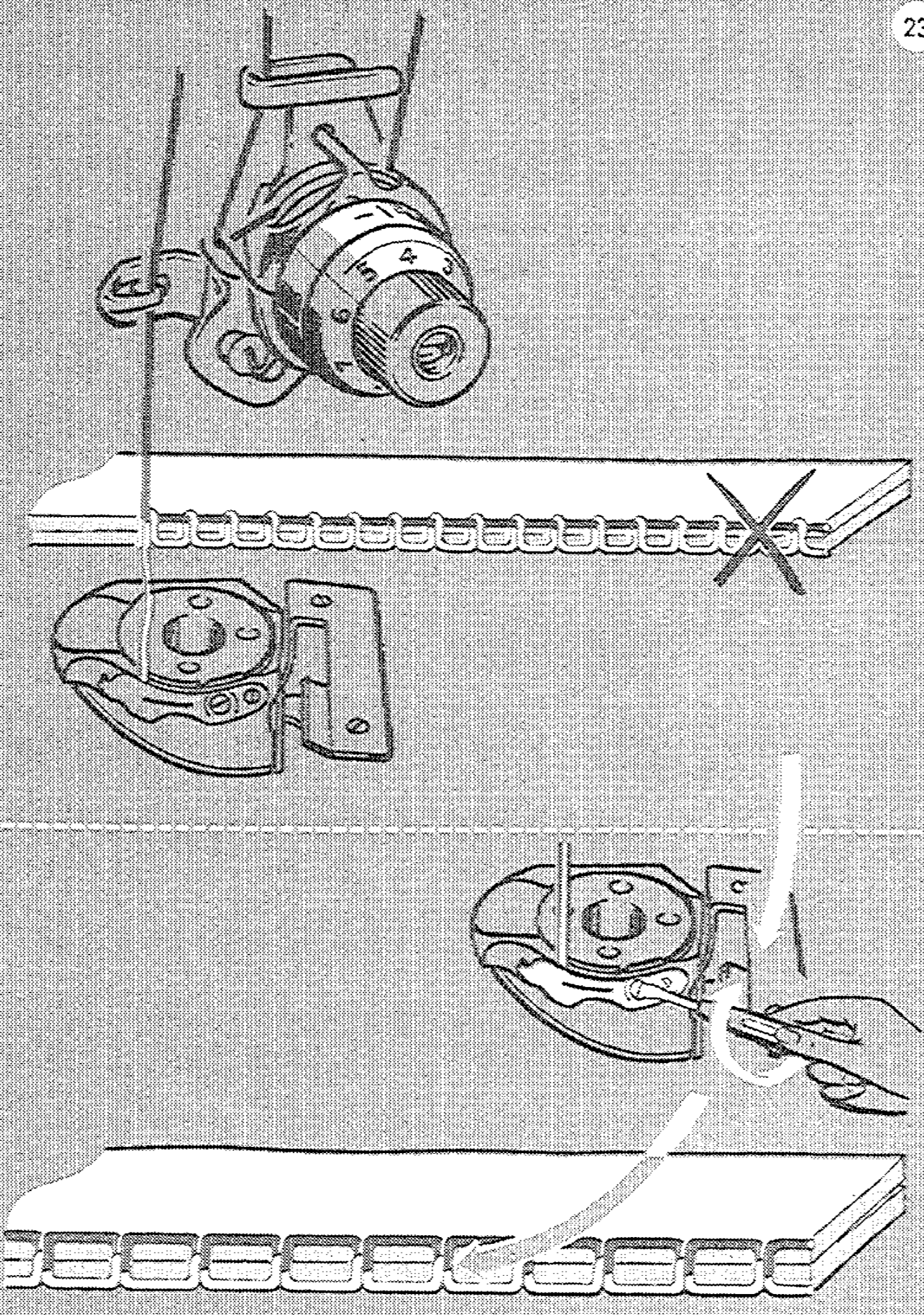

A
X
S
16

A
X
S
12

A
X
S
8

3 4 5 6
3 4 5 6
3 4 5 6

A
X

3

3
4
5
6

3
4
5
6

20
12
8
6
1
2
3
4

2
3
4
5

A
B
C
A
B
C
A
B
C

3 4 5 6
4
20
12
8
6
3 4
5
1
6 5
3 2

B
SPECIAL
R
Q
P
O
N
M
L

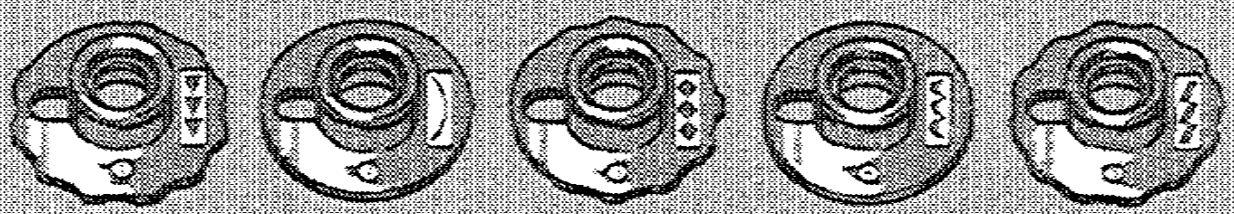

SPECIAL

SPECIAL

1

5

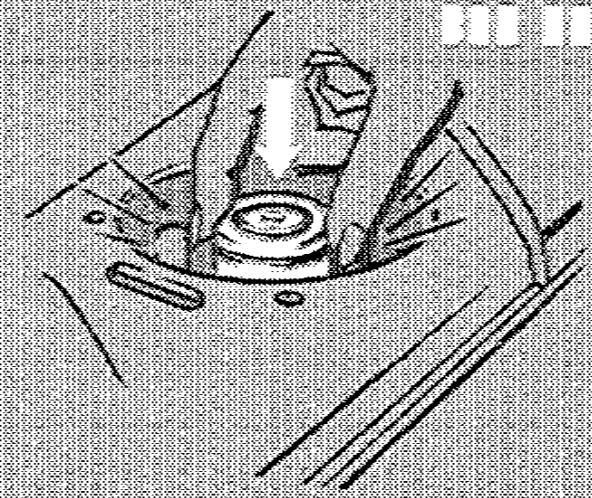

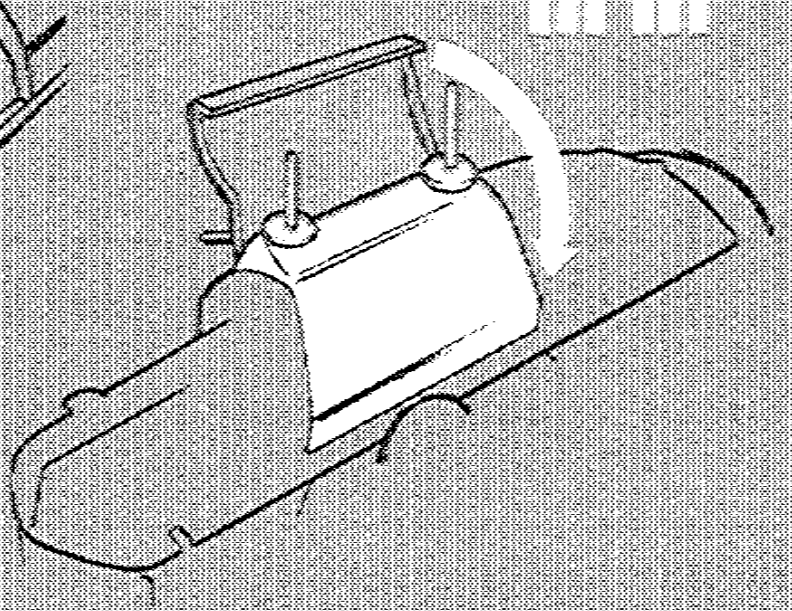

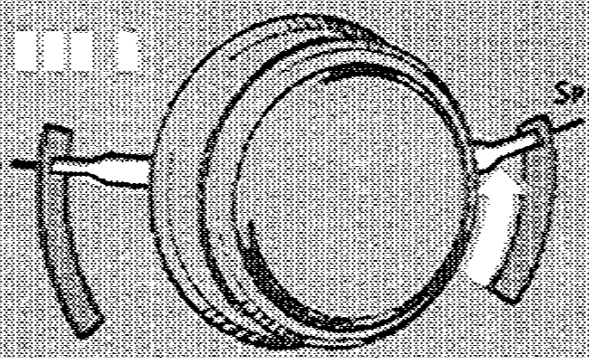
SPECIAL
B

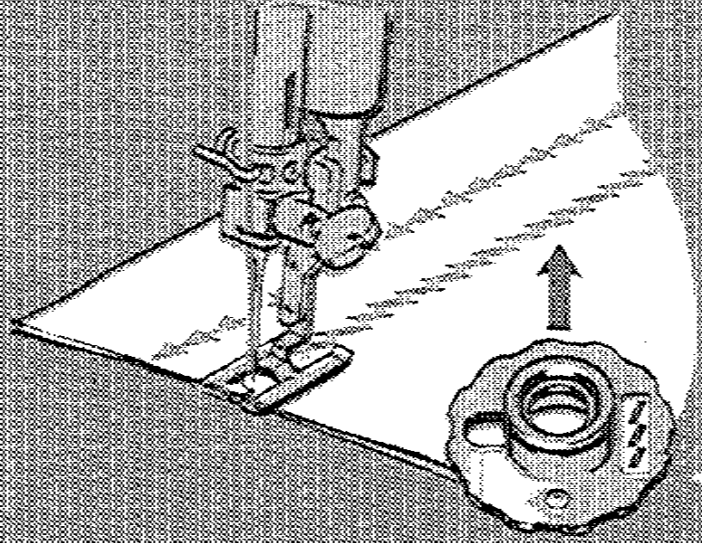

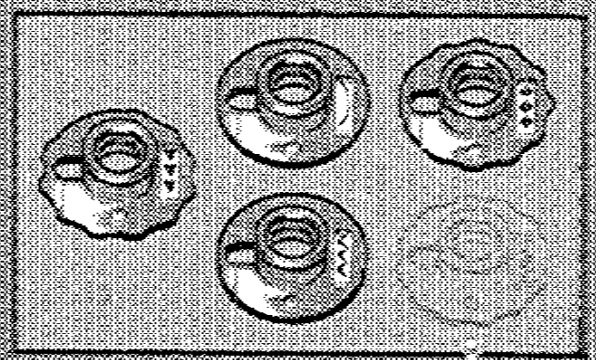

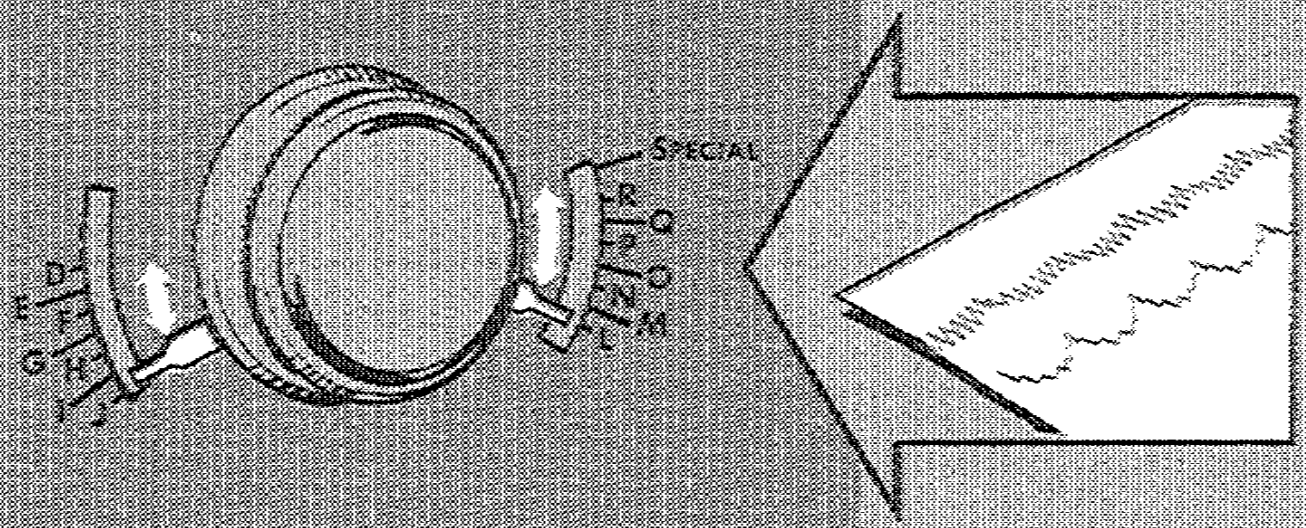
SPECIAL
A
B
C
D
E
F
G
H
I
J
K
L
M
N
O
P
Q
R

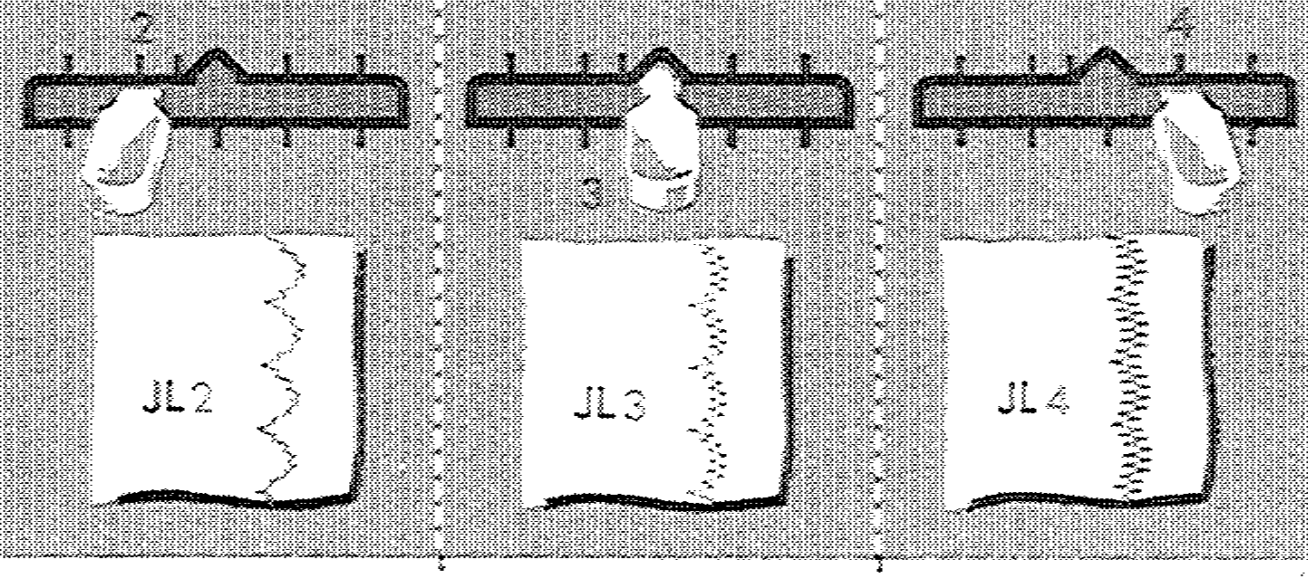
2
3
4
JL2
JL3
JL4

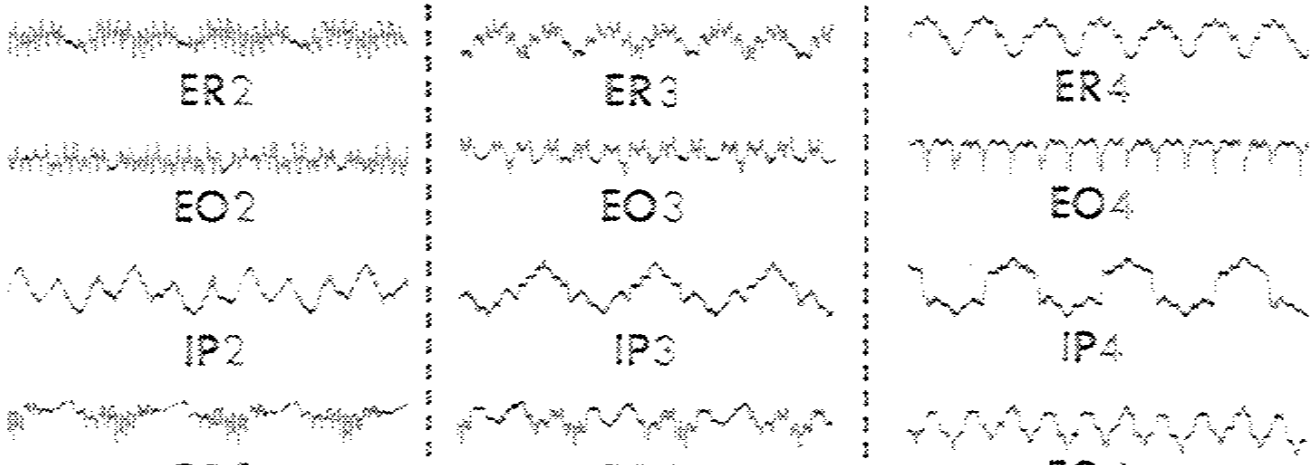
ER2
ER3
ER4
EO2
EO3
EO4
IP2
IP3
IP4
FQ2
FQ3
FQ4

3456
2
2
A
B
C

3
4
5
6

B
C

A
Special
R
P
N
O
M

2

3

2
3

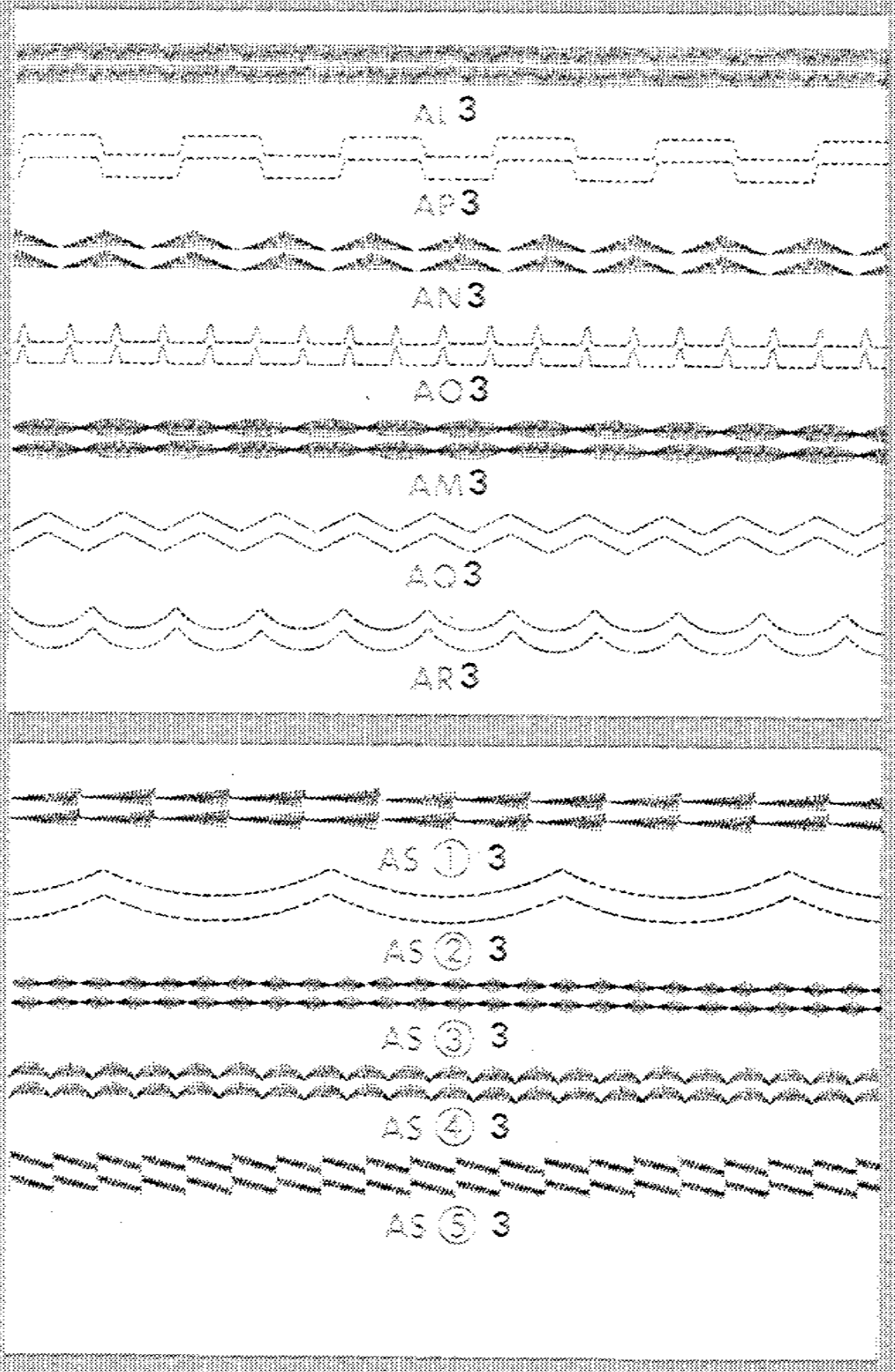
AL 3
AP 3
AN 3
AO 3
AM 3
AO 3
AR 3
AS ① 3
AS ② 3
AS ③ 3
AS ④ 3
AS ⑤ 3

3456

345

3
4
5
6

A
K

3

B
2
4
3
5

A
X
3

A
A
3
S
1
2
3

B
M

3 4 5 6
3

3 4 5 6

3 4

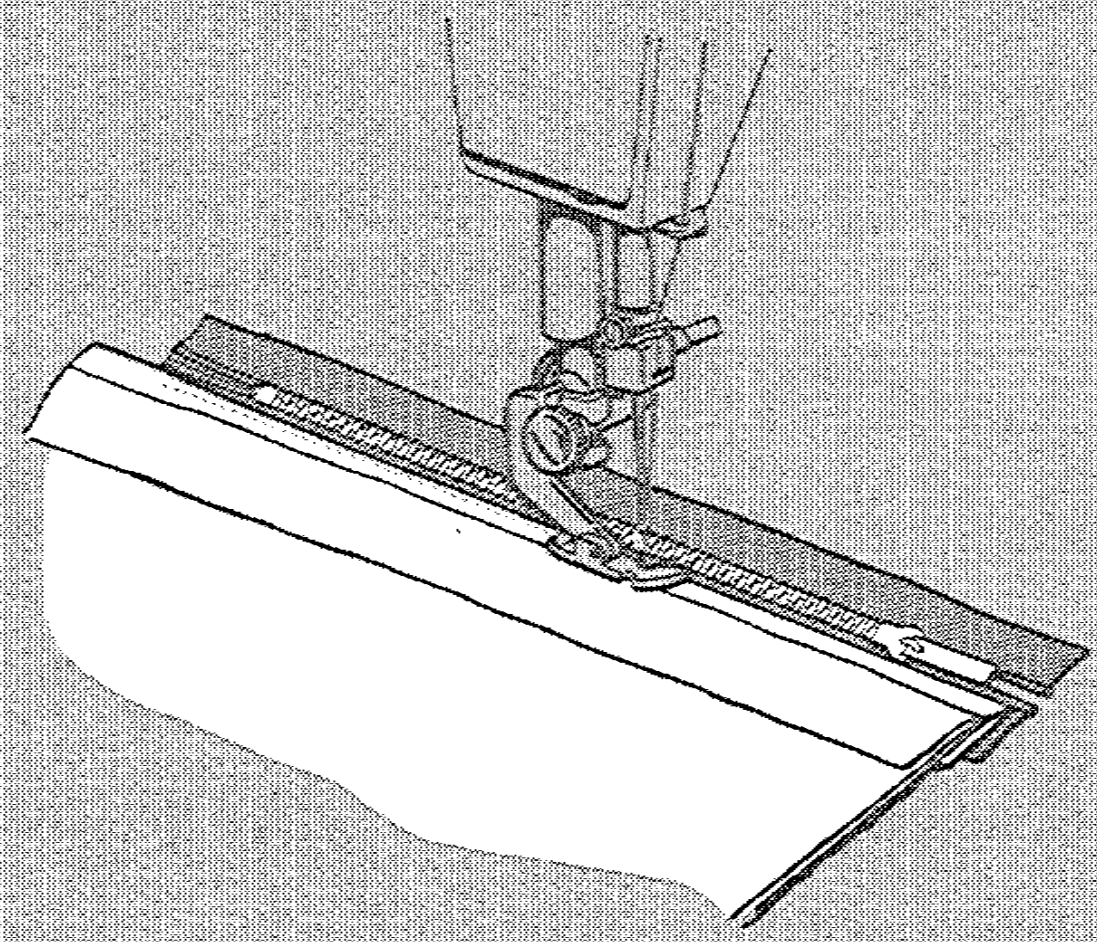

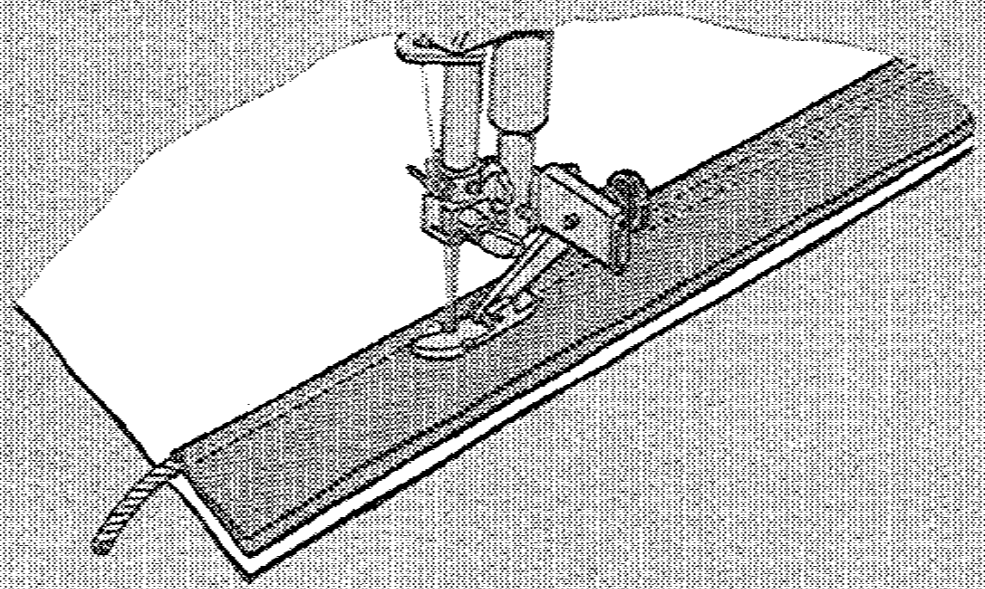

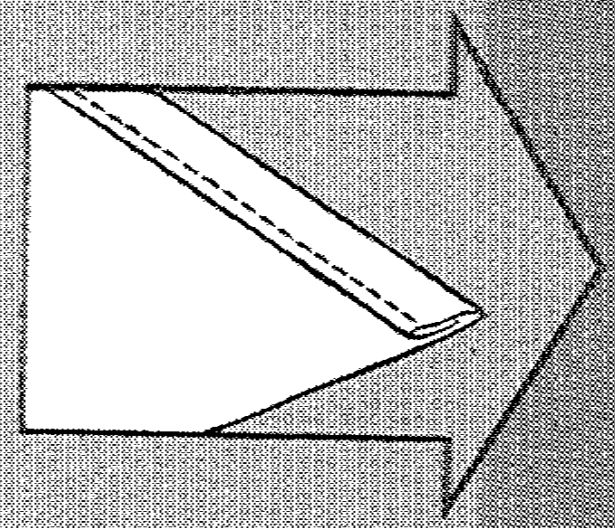

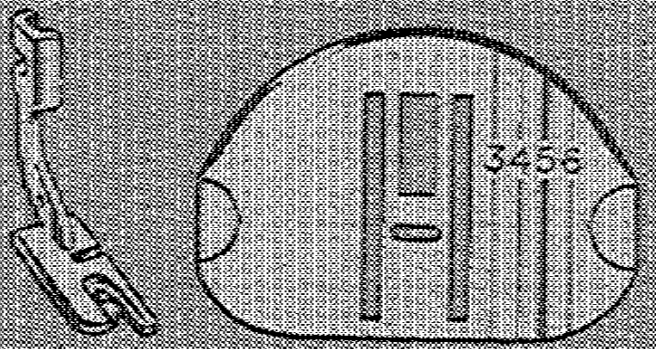
3456

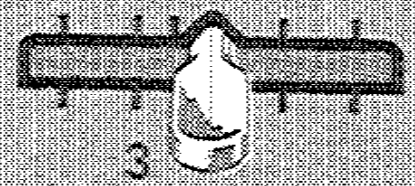
3

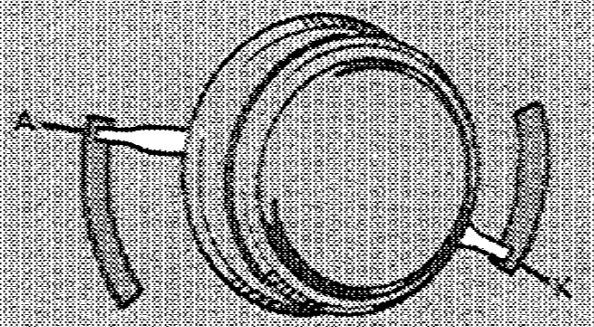
A
X

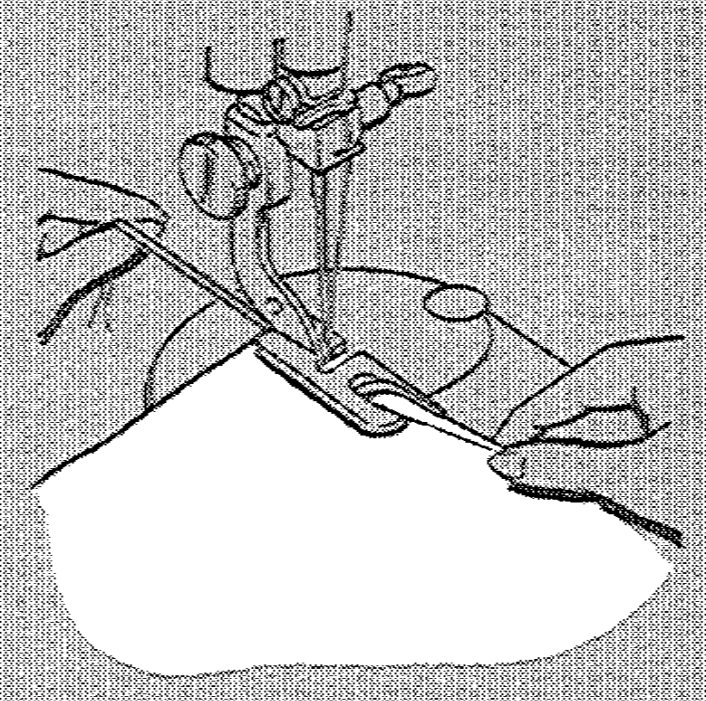

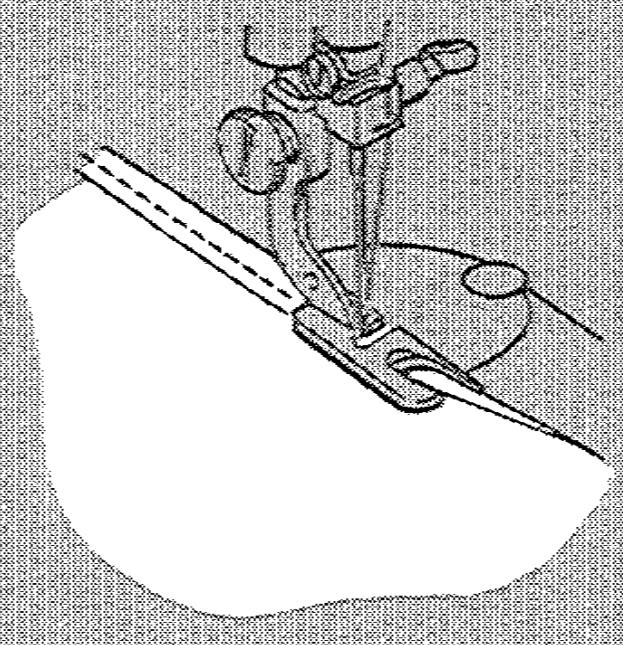

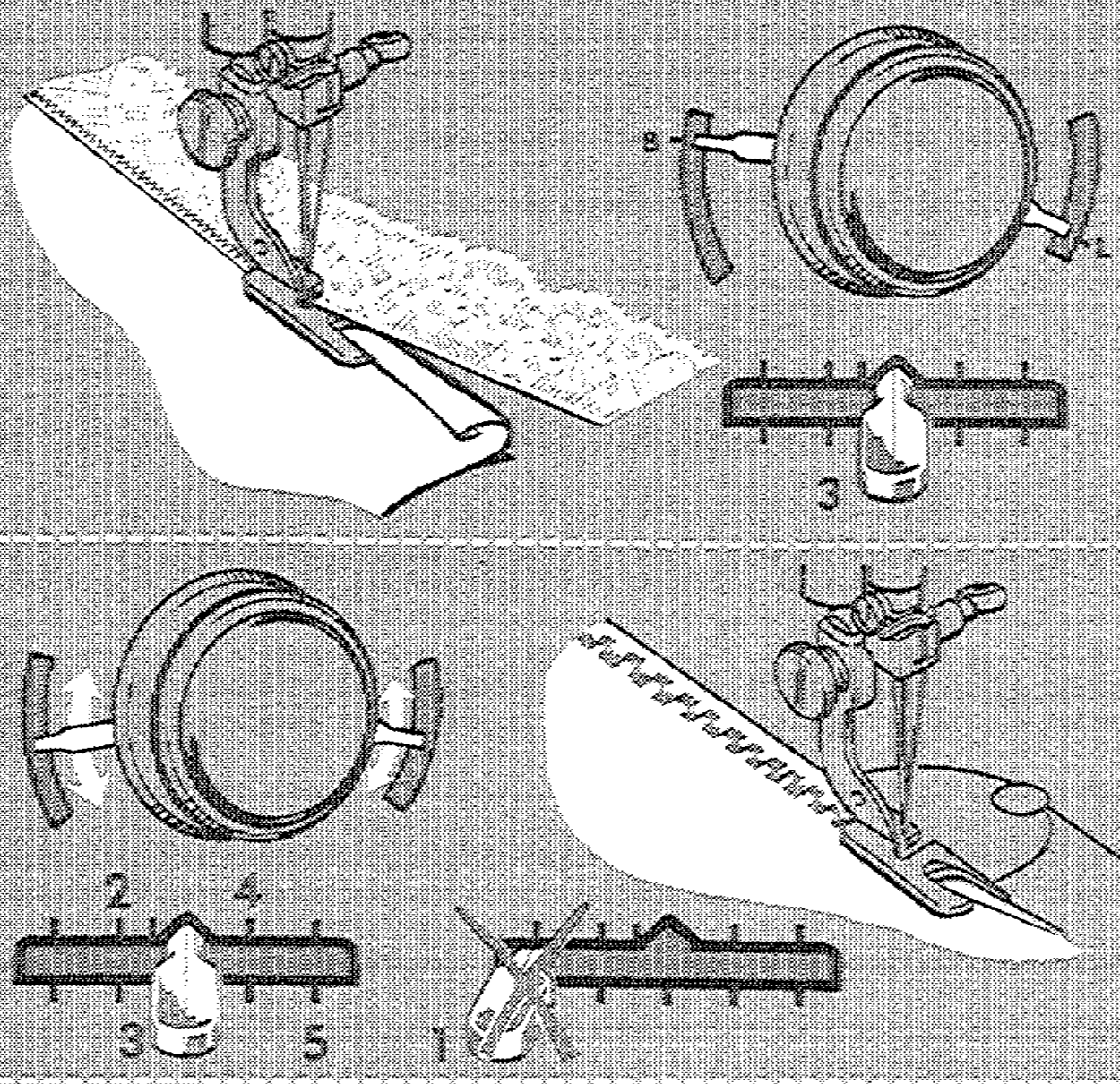
3

2
4
3
5
1

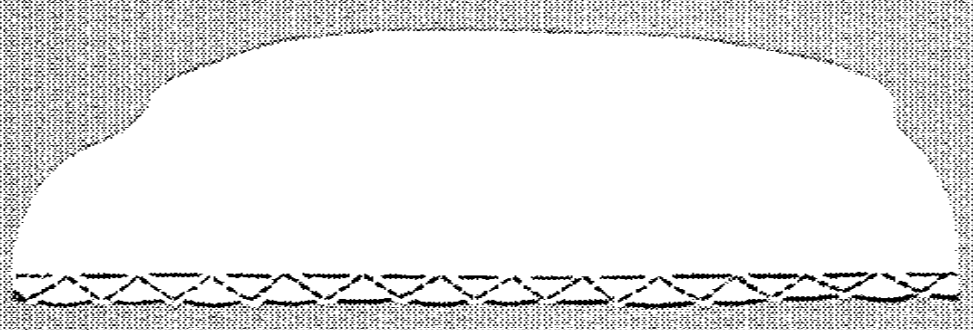

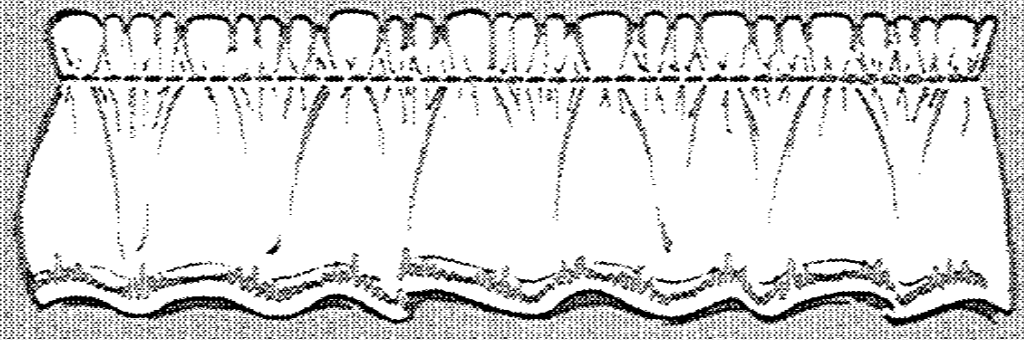

3
4
5
6

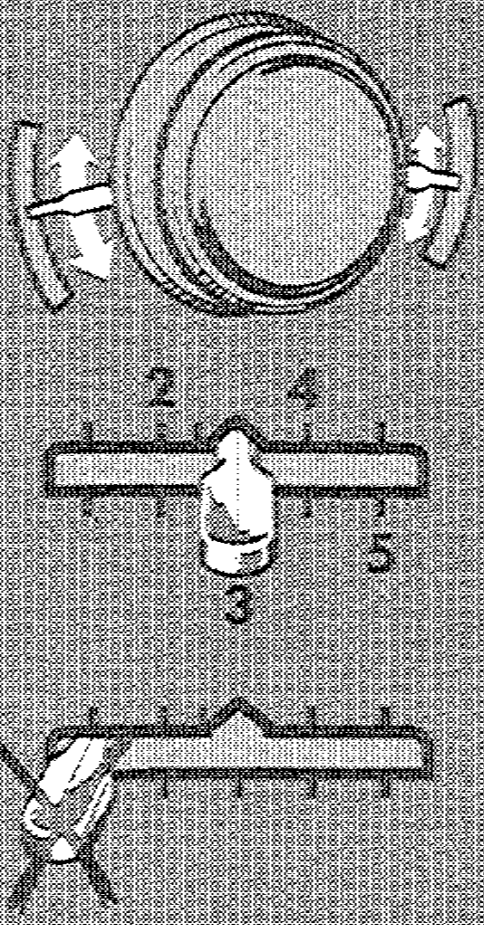
2
4
5
3
1

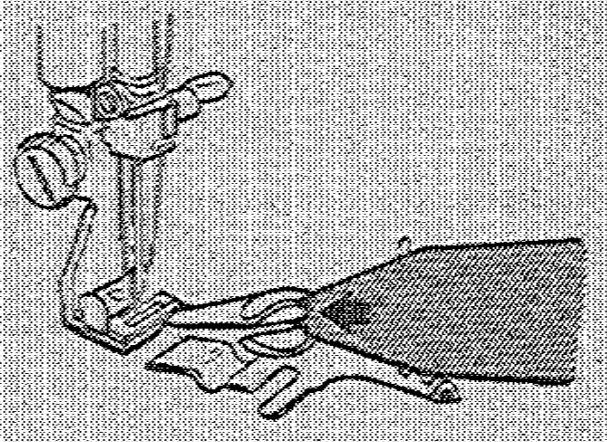

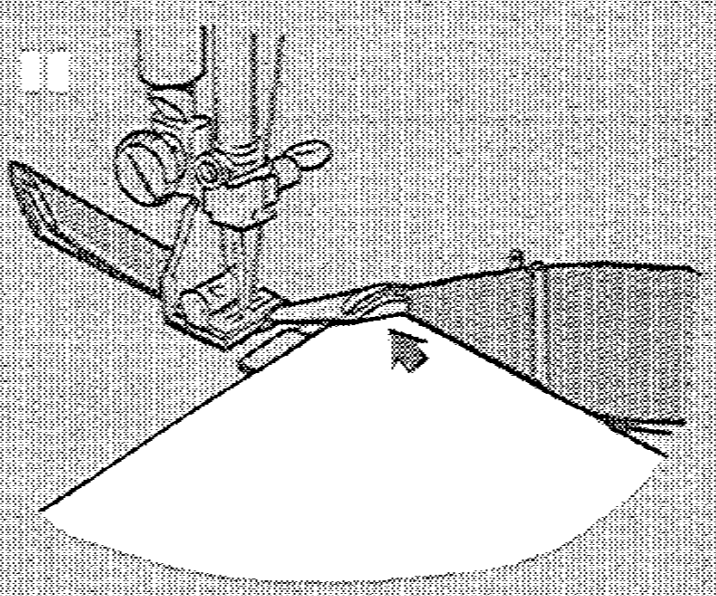





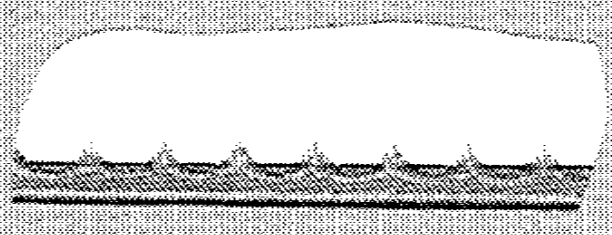

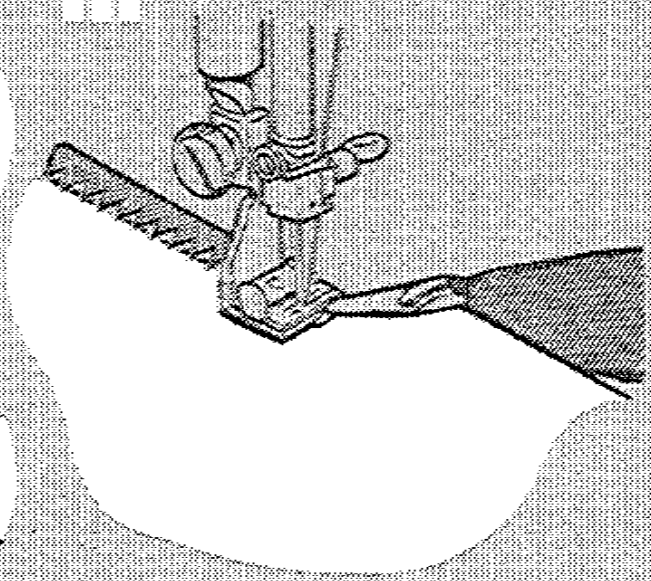

A
K
A
K
3
3

ЗКА
0
45
6
3

I

II

III

IV

V

VI

1
2
15
32
32
2
16-19, 26
38, 39
54
6
20-23
40
56
7-10
24
42
58
12
28
46
60
14
28, 30
50
62 - 65

