PFAFF

coverlock 4872

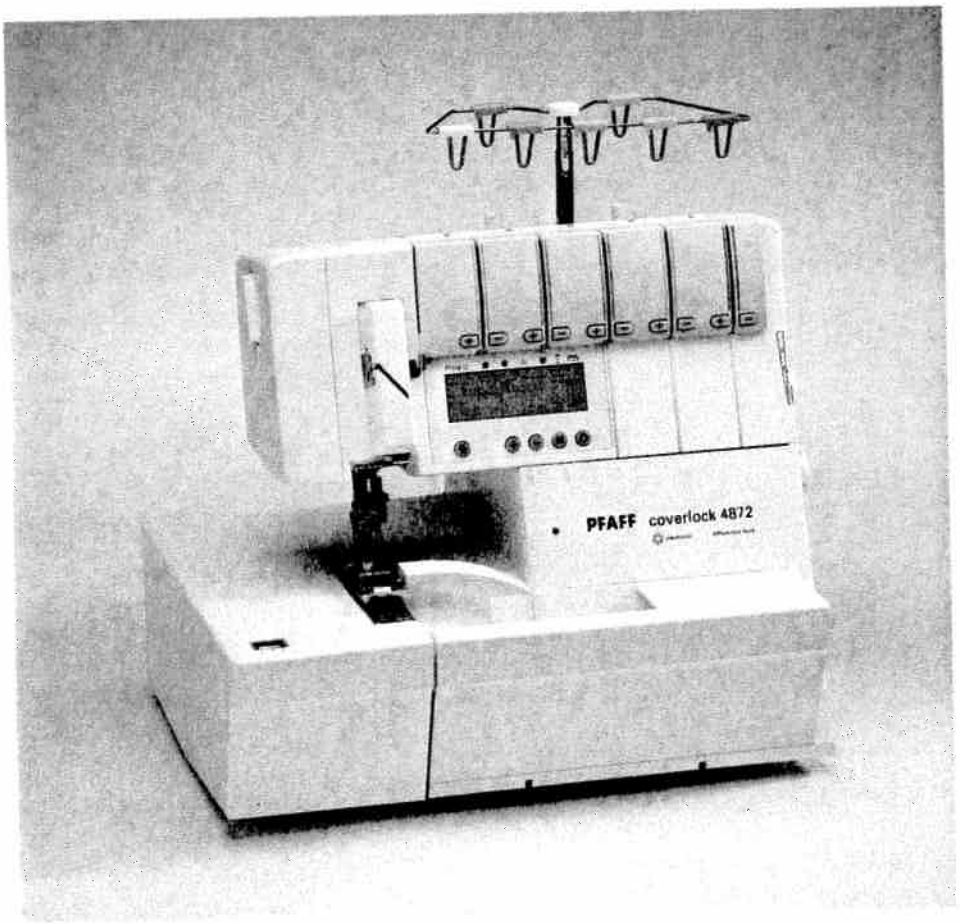

Instruction Manual

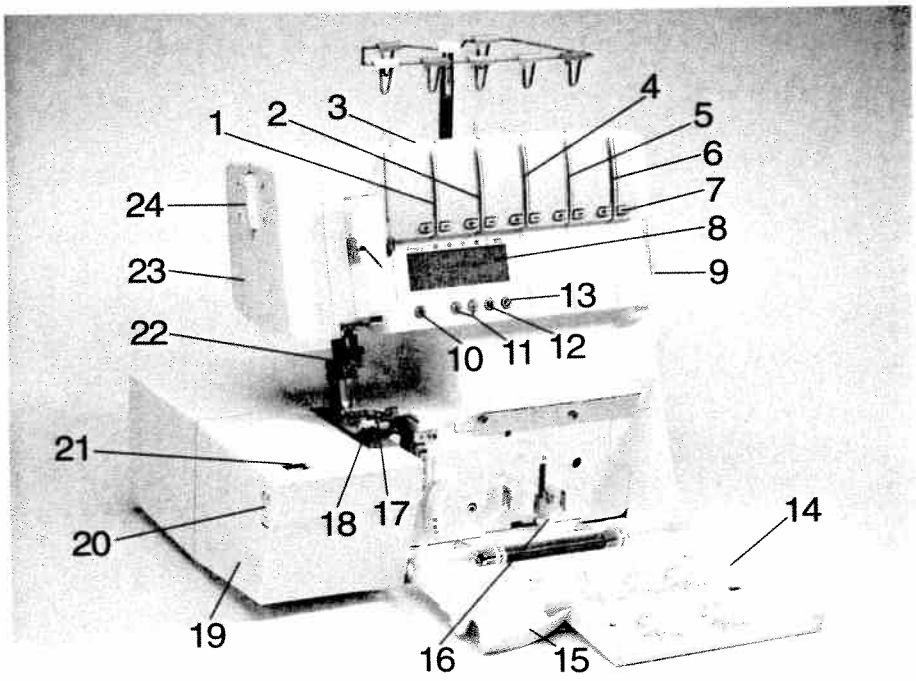
1
2
3
4
5
6
7
8
9
10
11
12
13
14
15
16
17
18
19
20
21
22
23
24

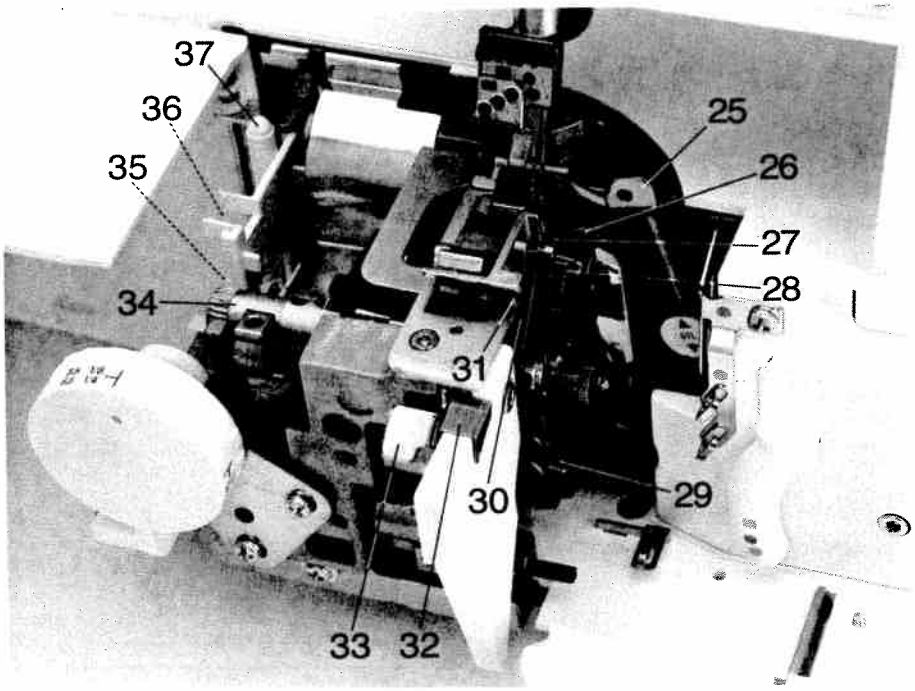
25
26
27
28
29
30
31
32
33
34
35
36
37

Parts of the coverlock 4872

1 Upper needle-thread tension
2 Upper needle-thread tension
3 Carry handle
4 Thread tension/upper looper thread
5 Thread tension/lower looper thread
6 Thread tension/two thread chainstitch looper/ cover stich looper
7 Tension keys + and –
8 LCD display
9 Slide for sewing speed pre-selection
10 Tension release key
11 Program selection keys ⊕ and ⊖
12 Memory key M
13 Memory selection key P
14 Looper cover
15 Blade guard
16 Looper disengaging lever
17 Standard presser foot
18 Needle plate
19 Swivel plate
20 Adjusting knob for seam width
21 Seam width viewing window
22 Needle holder
23 Sewing light cover
24 Adjusting knob for the pressure foot pressure

25 Upper overedge looper
26 Lower overedge looper
27 Swiveling stitch width latch
28 Two-thread chainstitch looper
29 Threading aid for the two thread chainstitch looper/ cover stitch looper
30 Movable upper blade
31 Fixed lower blade
32 Clamp spring for serging thread chains
33 Needle plate disengaging lever
34 Handwheel for lowering the upper blade
35 Tweezers
36 Converter
37 Allen key

For easier understanding of this instruction book please fold out this and the last page when reading.

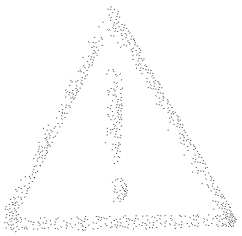

Safety rules

For the United Kingdom only

The leads must definitely not be connected to the safety lead terminal ⏚ nor to a plug with three pins.

The wires in the mains lead are colored according to the following code:

Blue: Neutral Brown: Live

As the colors of the wires in the mains lead of this appliance may not correspond with the color coding of the terminals in your plug, proceed as follows:

The wire which is colored blue must be connected to the terminal which is marked with the letter N or colored black.

The wire which is colored brown must be connected to the terminal which is marked with the letter L or colored red.

Cut-off mains plugs are definitely not to be used, but disposed of immediately. Defective mains leads must be replaced completely.

Only 3 A spare fuses must be used as approved by ASTA according to BS 1362 and the fuse cover must be marked 3 A or with the corresponding color code.

The plug must never be used without fuse cover. Spare fuse covers are available from electrical suppliers or the PFAFF agencies.

Please also observe the general safety notes on page 2.

Important safety instructions

For Australia only

- If the supply cord is damaged, it must be replaced by the manufacturer or its service agent or a similarly qualified person in order to avoid a hazard.
- The appliance is not intended for use by young children or infirm persons without supervision.
- Young children should be supervised to ensure that they do not play with the appliance.
- Switch off or unplug the machine when leaving it unattended.
- Before servicing the appliance or replacing lamps, unplug the machine.

You will find the contents on page 4 and 5.

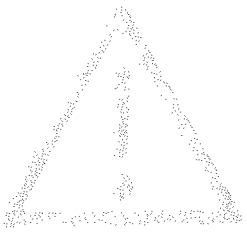

Important safety instructions

For the United States only

This sewing machine is designed and manufactured for HOUSEHOLD use only. When you use an electric appliance, the following basic safety precautions should always be adhered to: Read all instructions before using this sewing machine.

DANGER To reduce the risk of electric shock:

1. The sewing machine should never be left unattended when plugged in. Always unplug this appliance from the electric outlet immediately after using and before cleaning.
2. Always unplug before relamping. Replace bulb with same type rated 5 Watts.
3. Do not reach for a sewing machine that has fallen into water. Unplug immediately.
4. Do not place or store a sewing machine where it can fall or be pulled into a tub or sink. Do not place in or drop into water or other liquid.

WARNING To reduce the risk of burns, fire, electric shock, or injury to persons:

1. Do not allow to be used as a toy. Great care is necessary when this sewing machine is used by or near children.
2. Only use this sewing machine for its intended purpose as described in this manual. Only use attachments recommended by the manufacturer as contained in this manual.
3. Never operate this sewing machine if it has a damaged cord or plug, if it is not working properly, if it has been dropped or damaged, or dropped into water. Return the appliance to the nearest authorized dealer or service center for examination, repair, electrical or mechanical adjustment.
4. Never operate the sewing machine with any air openings blocked. Keep ventilation openings of the sewing machine and foot control free from the accumulation of lint, dust and loose cloth.
5. Never drop or insert anything into any opening.
6. Do not use out of doors.
7. Do not operate where aerosol (spray) products are being used or where oxygen is being administered.
8. To disconnect, turn all controls to off ("0") position, then remove plug from socket.
9. Never operate on a soft surface such as a bed or couch where the air openings may be blocked.
10. Do not unplug by pulling on cord. To unplug, hold the plug, not the cord.
11. Keep fingers away from all moving parts. Special care is required around the sewing machine needle.
12. Always use the proper needle plate. The wrong plate can cause the needle to break.
13. Do not use bent or blunt needles. Only use needles recommended by the manufacturer.
14. Do not pull or push fabric while stitching. It may deflect the needle, causing it to break.
15. Switch the sewing machine off ("0") when making any adjustments in the needle area, such as threading needle, changing needle, threading bobbin, or changing presser foot, etc.
16. Always unplug sewing machine from the electric outlet when removing covers, lubricating, or when making any other user servicing adjustments mentioned in the instruction manual.
17. Hold plug when rewinding into cord reel. Do not allow plug to whip when rewinding.

Please also observe the general safety notes on Page 2.

KEEP THESE INSTRUCTIONS IN A SAFE PLACE

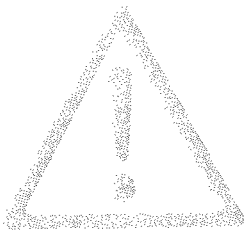

Notes on safety

Notes on safety for domestic sewing machines according to EN 60335-2-28 or IEC 335-2-28.

1. The user must exercise adequate caution with regard to the up-and-down movement of the needle and constantly observe the sewing area during work.
2. **When leaving the machine, during maintenance work or when changing mechanical parts or accessories, always disconnect the machine from the main power by unplugging the lead cord from the wall outlet.**
3. The maximum permissible wattage for the sewing lamp is 5 watts.
4. The tension of the belt drive must only be adjusted by a **PFAFF mechanic.**
5. The machine must be put into operation **according to the indications on the specification plate.**
6. Do not place any objects in openings on the machine.
7. **Do not use** the sewing machine if:
   – there is visible damage,
   – its function is defective,
   – it is wet, e.g. with condensation which can occur when a cold machine is brought into a warm room.
8. **Do not pull** the mains plug out of the socket by its cord.
9. If this appliance is used for another purpose than that intended or if it is wrongly operated, we **cannot accept any liability** for any damage caused.
10. To avoid the risk of electric shock, do not open the machine. There are no parts inside the machine which the user can repair. **This is the exclusive responsibility of our qualified service staff.**
11. **Be sure to use only original PFAFF parts.**
12. The machine is designated for a mains supply with a nominal voltage of +/– 10 % and a rated frequency of +/– 4 %.
13. When used properly, the temperature of the outer components of a non-electronically controlled foot control can reach up to 85° C. Constant use at a low speed is therefore not permitted in order to avoid damage.

Environment

The recommended environment is:
Ambient temperature 50° F (10° C) to 104 °F (40° C)
Humidity 20 % to 80 %.
Storage temperature - 13° F (- 25° C) to + 140° F (60° C).

The machine is insensitive to interference, but it should not be used in the direct vicinity of electronic appliances such as radios, televisions, PCs, radio transmitters, etc. This machine is a high quality electronic-mechanical appliance, it is a machine for supervised use in the home.It should be operated in such a way that it is not subjected to: **dust, severe dampness, direct sunlight, static electricity, heat-producing objects, corrosive chemicals or liquids.**

To permit adequate ventilation the machine must be kept unblocked and used on a firm and even surface.

Treatment

Always make sure not to damage your machine by **knocking or dropping** ist.

Cleaning

Housing and display:

To clean the housing, use a dry, clean and soft cloth which is free of lint. To remove any stubborn dirt, use a soft cloth with alcohol or paraffin.

Please Note!

Never use **insecticides or chemical products** such as petrol (gas) or thin chemicals to clean the housing.

Simple, up-to-date sewing

Congratulations! You have bought a high-quality product that provides unique advantages. Your new **coverlock 4872** can take any material in its stride and will sew through thick and thin for you.

Your PFAFF coverlock features the very latest in design and technology, and it is just as easy to use as this instruction manual is to follow.

If you now take a bit of time to study the instruction manual nothing can go wrong.

It is certainly time well spent, since it is the only way to find out just what your machine can do and make full use of all its features.

If you have any further questions, just ask your PFAFF dealer. He is happy to be of service with any help or advice.

So now let's get started! We wish you many enjoyable hours creating your very own fashion ideas!

Contents

Page

Accessories 6
Accessories, special 68, 69
Accessory box 6
Adjusting the machine to Prog. 1, 2, 3, 4 ..... 36, 37
Changing a spool on a threaded machine 24
Clamp spring 30
Cleaning the machine 65
Cone thread adapter 10
Converter, attaching 33
Cover stitch, important notes on sewing 51, 52
Differential feed 38, 39
Differential feed setting, changing and storing 42
Electrical connection 7
Electrical power master switch 7
Error 44
Foot control, connecting 7
Key functions 40
Language, choice 41
LCD Display 40
Light bulb (sewing lamp), changing 67
Looper cover 8
Lubricating the machine 65
Machine cover 6
Maintenance ..... 65 - 67
Needle holder 13
Needle inserting tool 13
Needle plate disengaging lever 64
Needle plate, removing 64
Needle position 12
Needle threader 25
Needle, changing 13
Power table 37
Presser foot 11
Presser foot lifter 10
Presser foot pressure 29
Presser foot, changing 29
Program overview ..... 46 - 48
Programmable memories, deleting all 44
Programmable memories, notes on storing 44

Page

Rubber feet, cleaning ... 65
Safety instructions ... 1, 2
Seam width adjusting knob ... 34
Seam width viewing window ... 34
Seam width, setting ... 34
Sewing light cover ... 67
Sewing problems and their solutions ... 70, 71
Sewing speed pre-selection ... 29
Specifications ... 72
Spool disc ... 10
Spool holder ... 7
Stitch formation correction measures ... 49 - 62
Stitch length adjustment knob ... 35
Stitch length setting, changing and storing ... 42
Stitch length, adjusting ... 35
Stitch programs programmable memories, activating ... 41
Stitch width latch, swiveling ... 32
Telescoping thread guide ... 9
Tension settings, changing and storing ... 43
Thread chain cutter ... 30
Thread chart ... 63
Thread guide, Clip-on ... 10
Thread net ... 9
Thread tension, setting ... 45
Thread unreeling disc ... 9
Threading aid for the two thread chainstitch looper/cover stitch looper ... 19, 21
Threading paths/overview ... 26 - 28
Threading the lower overedge looper (yellow) ... 16, 17
Threading the needle(s) ... 22, 23
Threading the two thread chainstitch looper cover stitch looper (violet) ... 18 - 21
Threading the upper overedge looper (pink) ... 15
Threading, important note ... 24
Threading/Thread guides ... 14
Upper blade, changing ... 66
Upper blade, disengaging ... 31
Upper blade, securing ... 35
Waste container ... 8

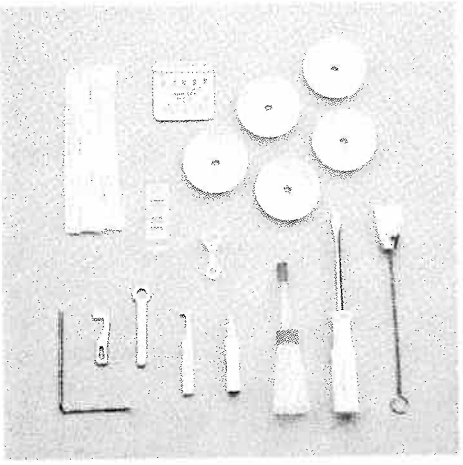

Accessory box

Open the accessory box **56** by gently pressing the bottom of the box inwards. The following accessories can be found in the box:

1 Overlock needle system EL X 705, cat. no. 2002
2 Thread nets (5)
3 Thread unreeling discs (5)
4 Screw driver
5 Needle threader
6 Wrench
7 Needle inserting tool
8 Replacement upper blade
9 Clip-on thread guide
10 Transparent presser foot (F) for cover stitch and two-thread chainstitch
11 Machine oil
12 Cleaning brush
13 Edge guide

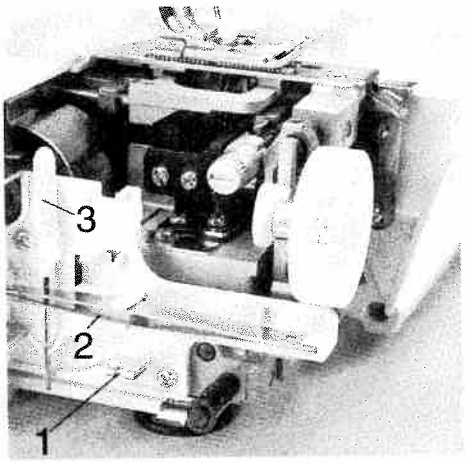

Further accessories

The following accessories can be found behind the swivel plate **19**:

1 Converter
2 Tweezers
3 Allen key

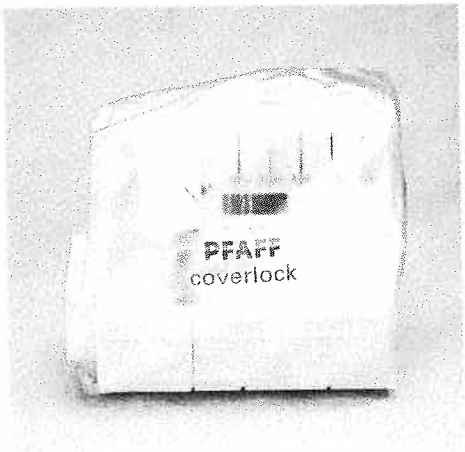

Machine cover

The machine cover protects the machine from dust and dirt. When the sewing process is finished, push the telescoping thread guide **39** together. The spool stand **41** must be pushed to its full extent into the machine, regardless of whether a spool is attached. Place the cover over the machine. The accessories should be stored in the accessory box or compartments behind the swivel plate.



Operating instructions

Electrical connection

Connect the lead cord between the socket **45** of the machine and the wall outlet.

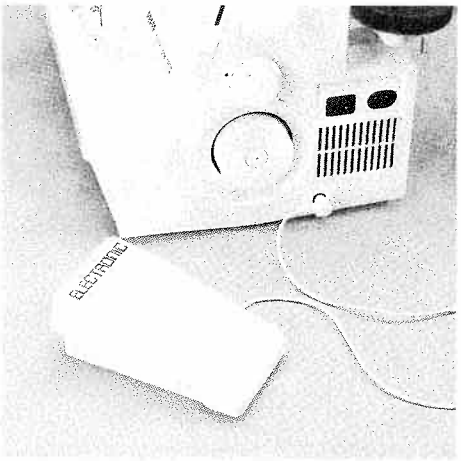

Connecting the foot control

Connect the plug of the foot control to the connection socket **47** of the machine.

The pre-selected sewing speed range (see page 29) is regulated by pressing the foot control.

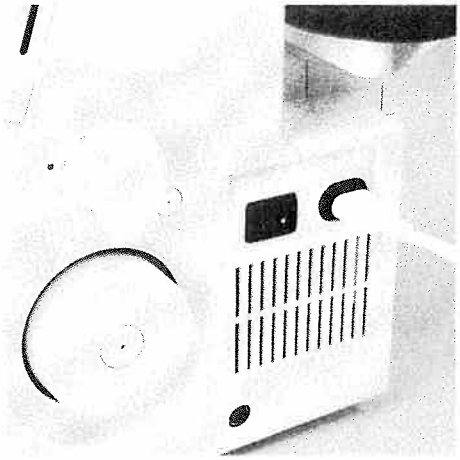

Master switch

When you turn on the master switch **46** the sewing lamp is illuminated.

The machine is now operational.

Notes on safety

This appliance has a polarized plug (one blade wider than the other).

To reduce the risk of electric shock, this plug is intended to fit in a polarized outlet only one way. If the plug does not fit fully in the outlet, reverse the plug. If it still does not fit, contact a qualified electrician to install the proper outlet.

Do not modify the plug in any way.

For control sewing machine, foot controller type F 8 YC-485 has to be used.



Looper cover

Push the looper cover **14** fully to the right and then swivel it down. **Five** types of stitches and their threading paths are portrayed in color on the inside of the looper cover.

Note: The **electricity supply** of the machine is **cut off** as soon as the **looper cover or swivel plate 19 is opened, for safety reasons,** i.e. sewing with the machine is no longer possible.

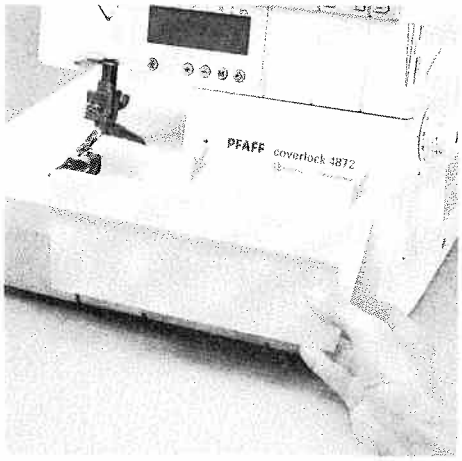

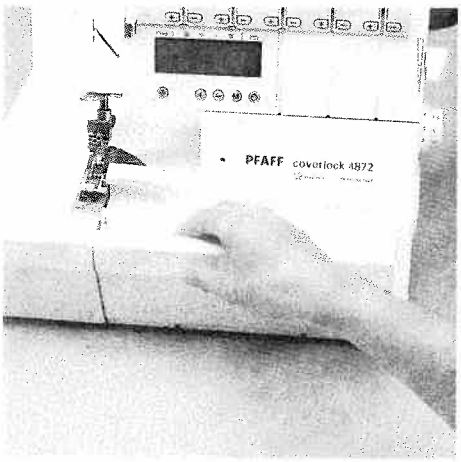

Waste container

Insert the upper latch of the waste container **53** into the upper slot of the looper cover **14**.

Apply pressure to the lower part of the container until the lower latches click into place in the lower slots of the looper cover.

To remove the waste container, repeat this procedure in the reverse order.

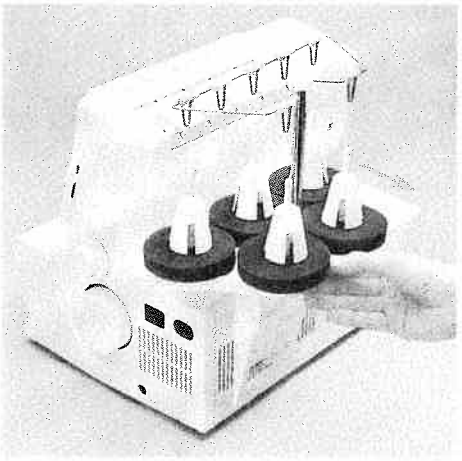

Spool holder

Before placing thread cones/spools on machine you must pull the spool holder **41** fully away from the back of machine.

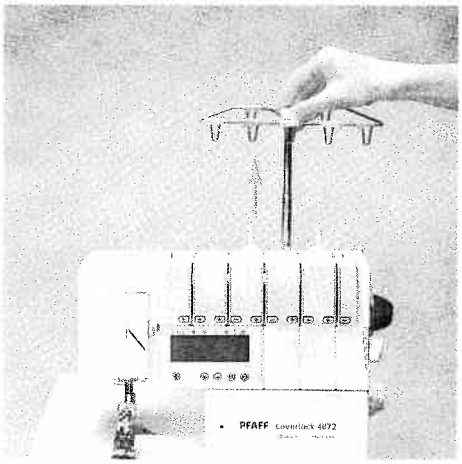

Telescoping thread guide

Pull the telescoping thread guide **39** upwards to its highest position.

To ensure optimum thread feed, turn the telescoping parts slowly until you hear the locking balls click into place.



Thread net

Synthetic threads generally unwind too quickly from the thread spool. Thread nets have been included to allow easy use of these threads. Pull the thread net (located in the accessory box) over the spool from below. Place the spool on the spool holder catching the bottom of the thread net with the spool pin.

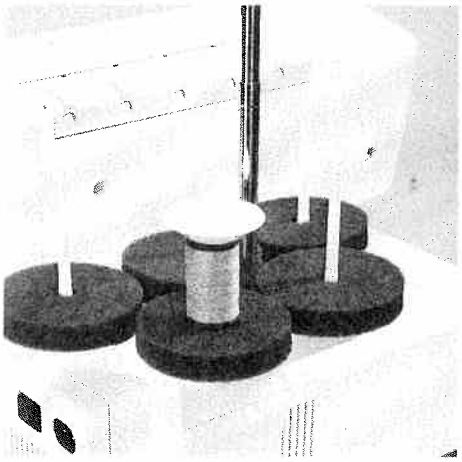

Thread unreeling disc

The thread unreeling disc (in the accessory box) is used for small spools/spools with notched or rough ends. Place the spool on the spool pin **42**. Place the thread unreeling disc on top of the spool. Make sure the spool disc **44** is used under the spool.

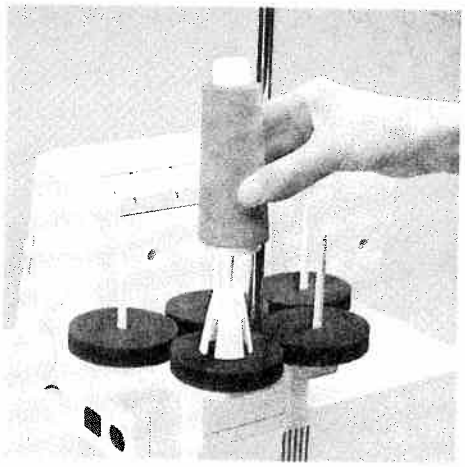

Spool disc/cone thread adapter

It is advantageous to use the thread unreeling disc **44** when sewing with large spools (5,000 – 10,000 m). To do this, place the cone thread adapter **43** onto the spool pin **42**. With synthetic threads, the spool discs take up any play or surplus in the thread and guarantee excellent thread feed.

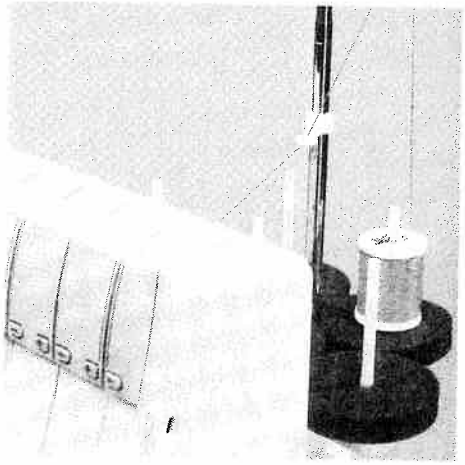

Clip-on thread guide

Use the clip-on thread guide accessory when sewing with decorative thread. Clip this onto the telescoping thread guide **39** and thread the machine as shown in the illustration. Use the thread net and the thread unreeling disc.



Presser foot lifter

The presser foot can be raised and lowered using the presser foot lifter **51**. The maximum vertical lift of 6.5 mm for the presser foot for particularly thick fabrics can be achieved by pressing the presser foot lifter towards the rear.

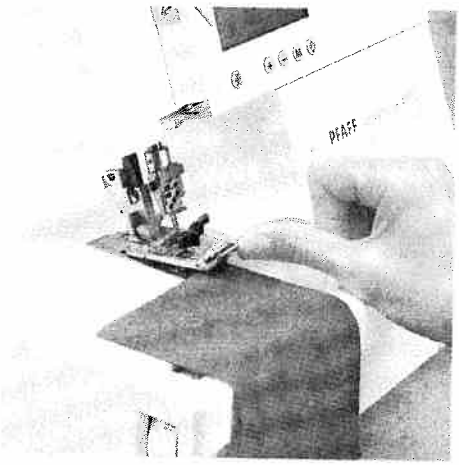

Once an initial thread chain has been created, the **presser foot lifter** no longer **needs** to be raised if you continue working with the same thread and presser foot. It is sufficient to gently lift the front part of the presser foot using your thumb. Slide the fabric under the raised part of the presser foot. The fabric is automatically taken up and fed into the machine when you activate the foot control.

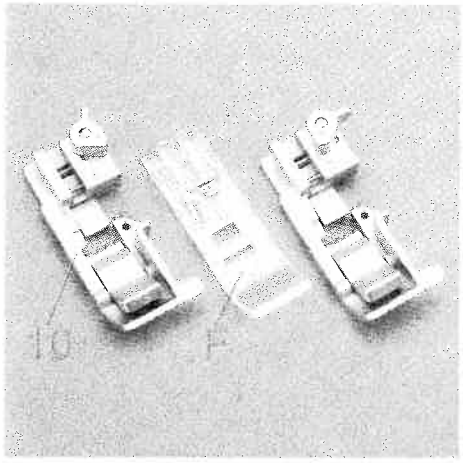

Presser foot

With the standard presser foot **10** use the setting **"A"** of the spring-loaded presser foot latch for the cover stitch programs (Progs. 1, 2, 3), the two-thread chainstitch (Prog. 4), the 4-thread safety-stitch seam (Prog. 19) and the 5-thread safety-stitch seam (Prog. 20).

The transparent presser foot **F** from the accessories can also be used for the cover stitch (Prog. 1, 2, 3) and the two-thread chainstitch (Prog. 4).

For all other programs use the standard presser foot **10** and the setting **"B"** for the spring-loaded presser foot latch.

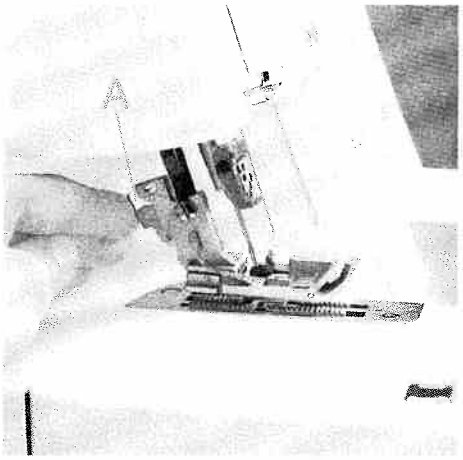

Changing the presser foot

Switch off the electrical power

To remove: Raise the needle(s) to the highest position by turning the handwheel towards you. Raise the presser foot and press the lever **A** at the rear of the presser foot holder. Pivot the presser foot clockwise until the front half of presser foot clears holder and remove by sliding foot away from you towards back of machine.

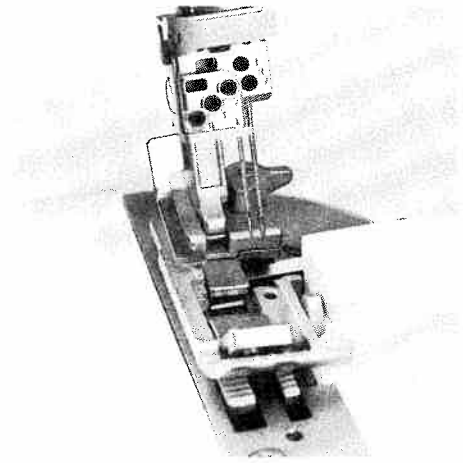

To attach: Place the presser foot behind and perpendicular to the sewing foot holder. Pivot the presser foot counterclockwise until the pin of the foot is directly under the presser foot holder clamp. Lower the presser foot lever and press lever A, if necessary, until the foot then clicks into place.

Check: Please lift the presser foot lever to ensure that the presser foot is properly locked into place.

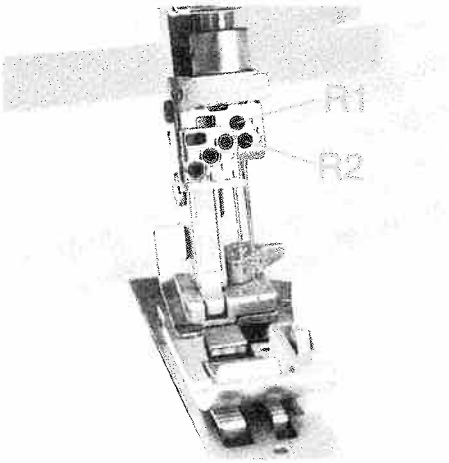

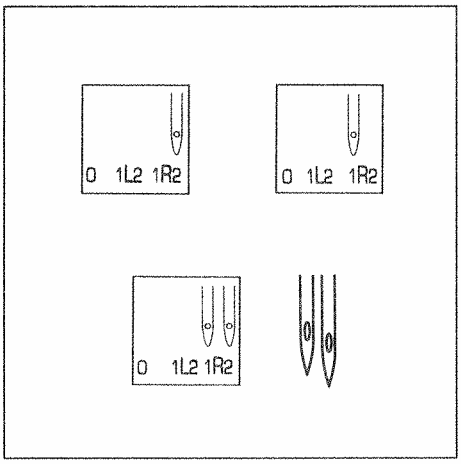

Needle position

This machine has 5 needle positions and can sew with a maximum of three needles at any one time. The needle positions concerned are L0, L1, L2, R1 and R2. The tightening/fastening screw is located directly above the corresponding needle.

The different needle positions are depicted in a schematic drawing in the instruction manual. Also refer to the examples above and below. Insert the needle(s) as shown on the LCD display.

Note: If both the needles R2 and R1 have been inserted, the left needle will be somewhat higher than the right needle.

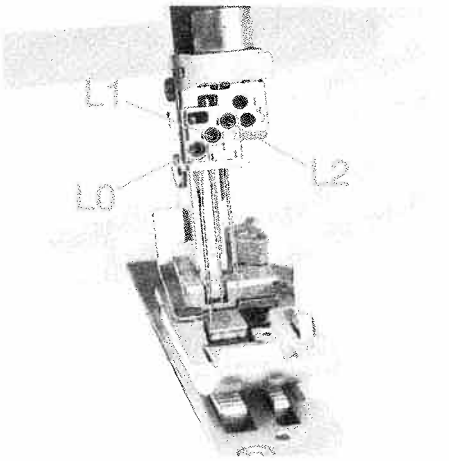

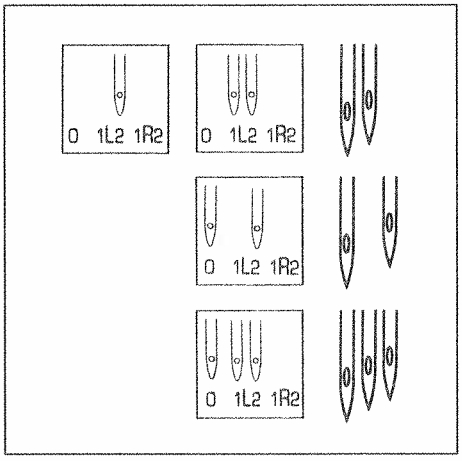

Note: If the needles L0, L1 and L2 have been inserted, the left needle will be the lowest of the three.

If the needles L1 and L2 have been inserted, the left needle will be somewhat lower than the right needle.

If the needle L0 and L2 have been inserted, the left needle will also be lower than the right needle.

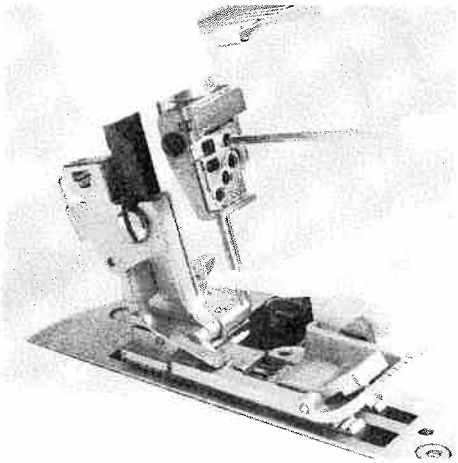

Changing the needle

Switch off the electrical power

To remove: Lower the presser foot and move the needle(s) to the highest position by turning the handwheel. Push the needle inserting tool (from the accessory box **56**) from below upward fully over the needle. Loosen the fastening screw of the needle (without removing it) with the Allen key and pull the needle down to remove.

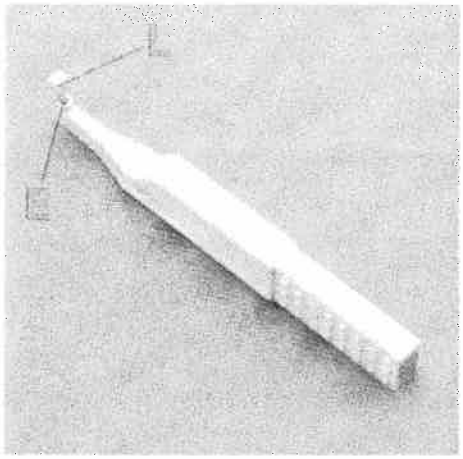

To insert: Insert the needle into the hole **E** of the needle inserting tool, so that the flat needle shank **K** faces the flat side **L** of the inserting tool. Now insert the needle fully into the holder and tighten the fastening screws. Remove the needle inserting tool.

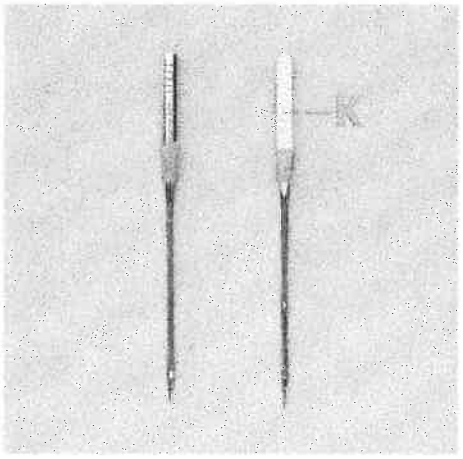

Overlock needle types **EL X 705, cat. no. 2002** are required for this machine.

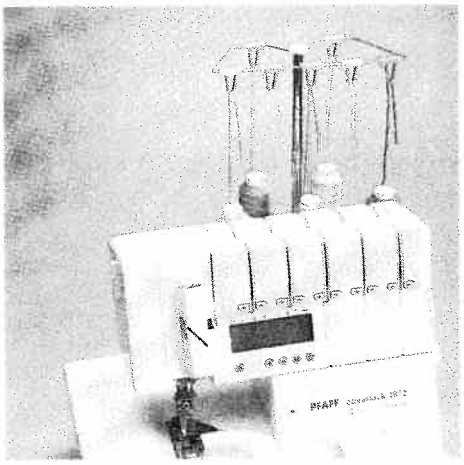

Threading the thread guides

Place the spools on the spool pins **42**. You will find information on the thread net, thread unreeling disc, reel disc and cone thread adapter on pages 9 and 10. Thread through the thread guides **38** from the back to the front following the colored threading paths.

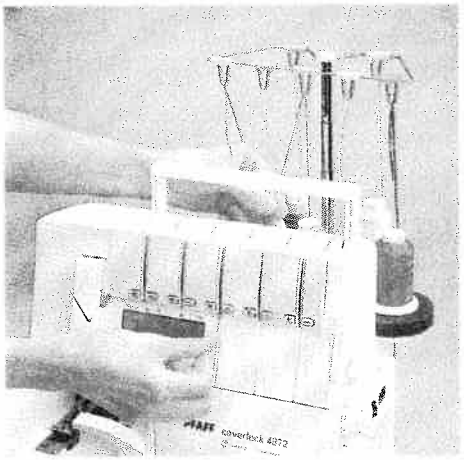

Pull the carry handle **3** upwards. Thread through the underside of the carry handle and through the rear thread guides **52** using both hands to pull the thread down until it slips under the thread guide. Guide the thread through the tension discs and pull it down until it is positioned firmly between the tension discs. Return the carry handle to its original position.

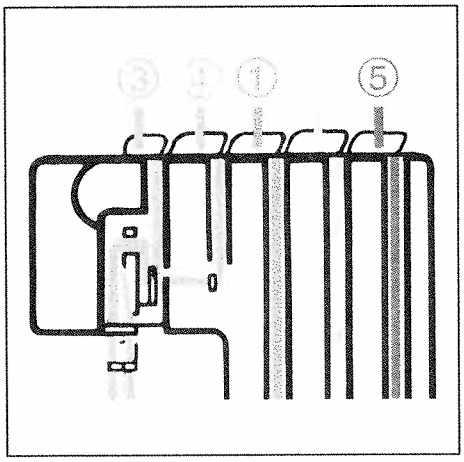

Note:

Thread in a sequence of **1 to 5**.

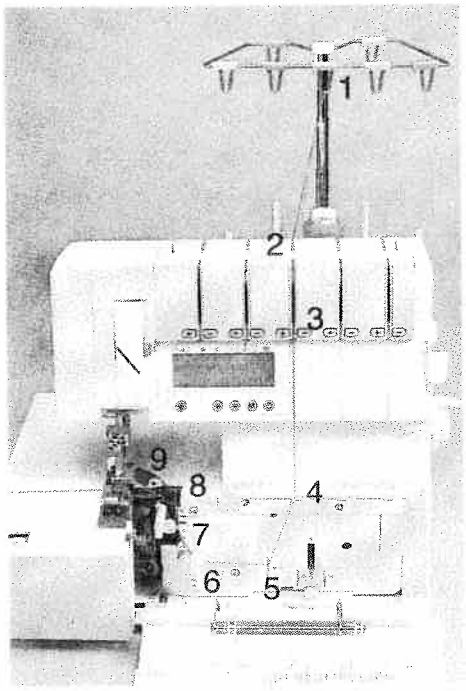

Threading the upper overedge looper (pink)

Turn the handwheel towards you until the upper overedge looper **25** is in its highest position. Thread in a sequence of **1 to 9**.

Note:

To make this task easier, use the tweezers which can be found behind the swivel plate.

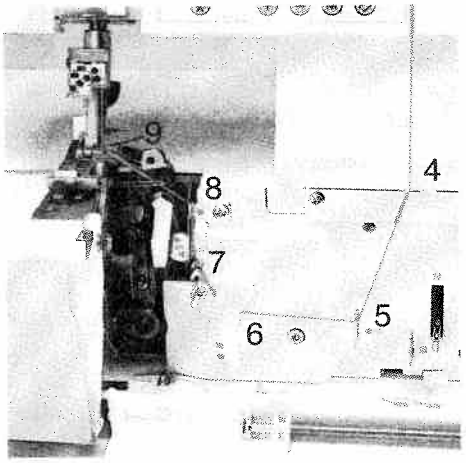

Thread through the thread guides **1 to 8**, which are marked with a pink dot.

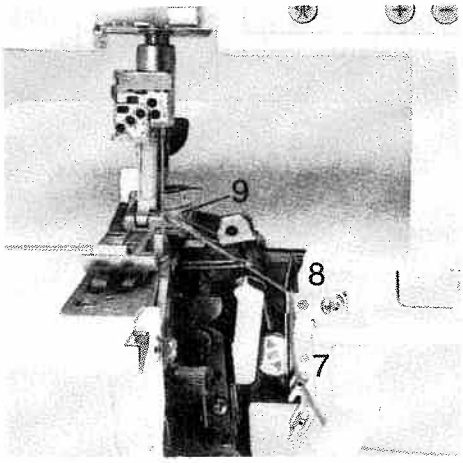

Thread from the front through the eye of the upper overedge looper **9**. Pull approximately 4" (10 cm) of thread through the looper and place it to the left under the presser foot.

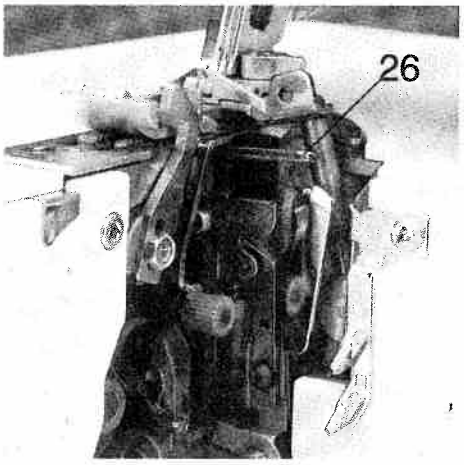

Threading the lower overedge looper (yellow)

Turn the handwheel towards you until the lower overedge looper **26** is on the extreme right.

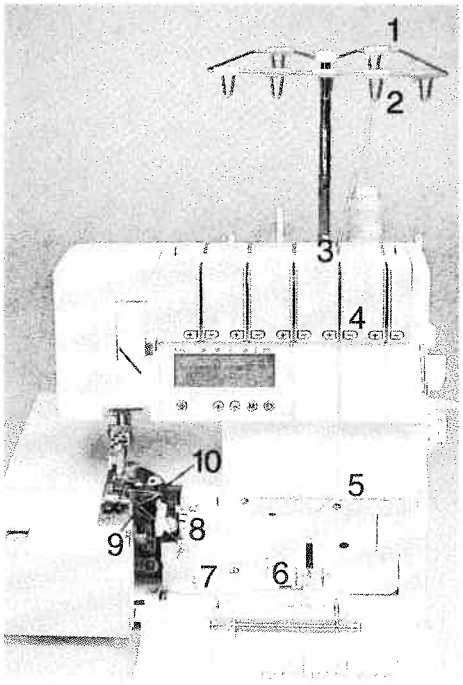

Thread in a sequence of **1 to 10**.

Note:

To make this task easier, use the tweezers which can be found behind the swivel plate.

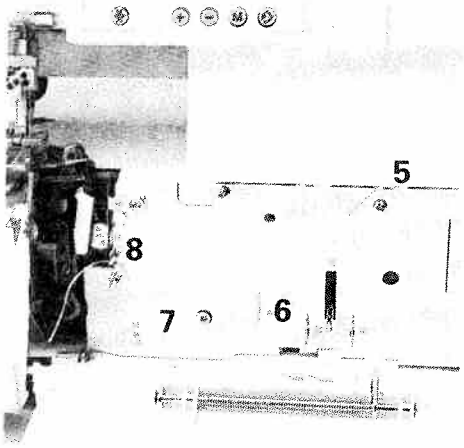

Thread through the thread guides **1 to 8**, marked yellow.

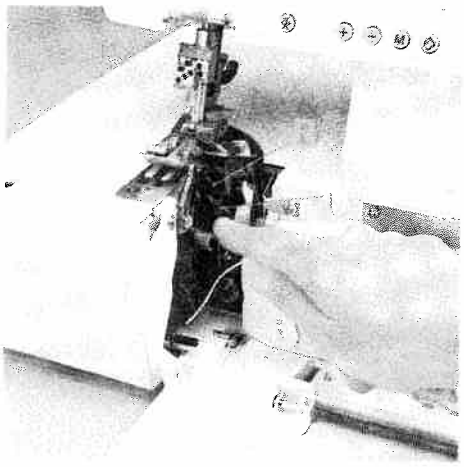

Press the lever **A** downwards and hook the thread into the guide **B**. Please also refer to the drawing below.

Note:

The lever returns automatically to its position as soon as you start sewing.

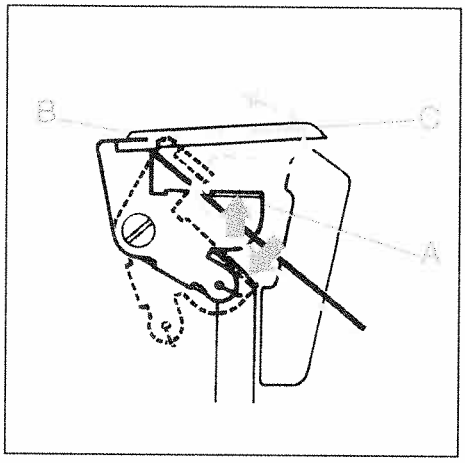

Thread from the front through the eye of the lower overedge looper **C** (= threading point **10**).

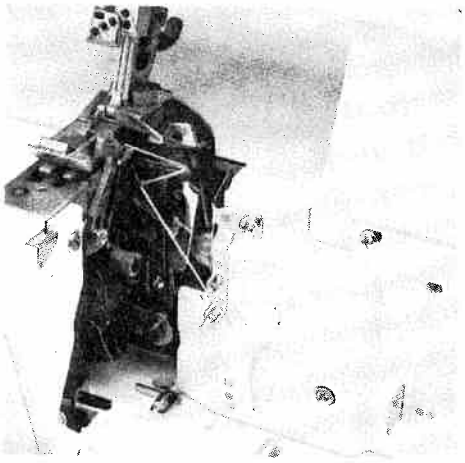

Pull approximately 4" (10 cm) of thread through the looper and place it to the left under the presser foot.

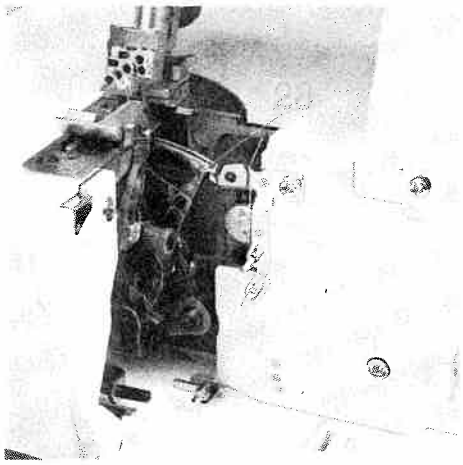

Threading the two thread chainstitch looper and cover stitch looper (violet)

Turn the handwheel towards you until the two thread chainstitch looper **28** is on the extreme right.

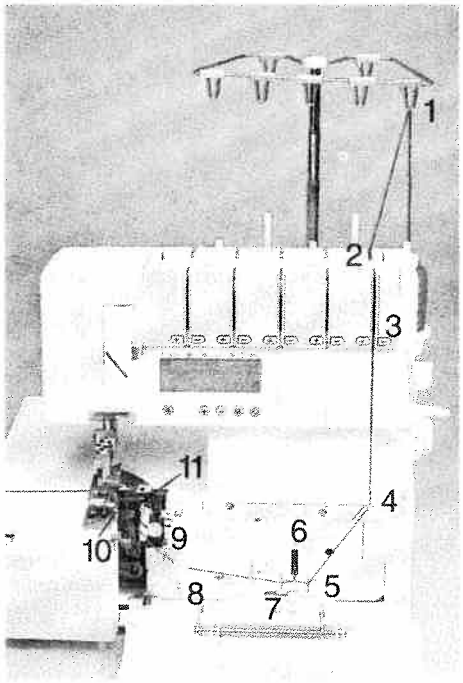

Thread in a sequence of **1 to 11**.

Note:

To make this task easier, use the tweezers which can be found behind the swivel plate.

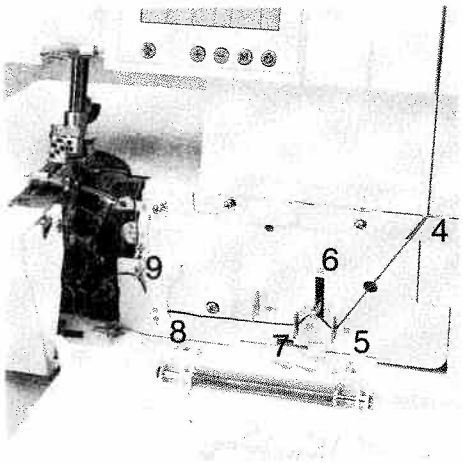

Thread the thread guides which are marked with a violet square in a sequence of **1 to 9**.

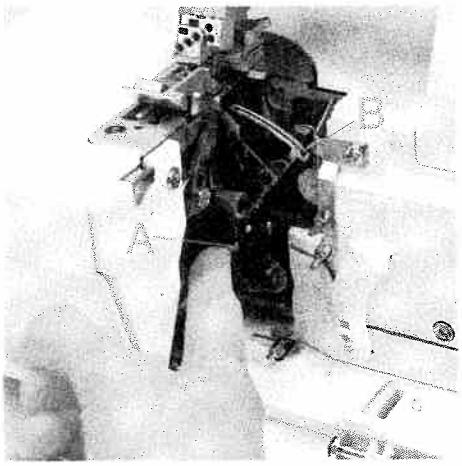

Push the lever **A** upward and hook the thread into the slot **B**. Also refer to the drawing below.

Note:

The lever returns automatically to its position as soon as you start sewing.

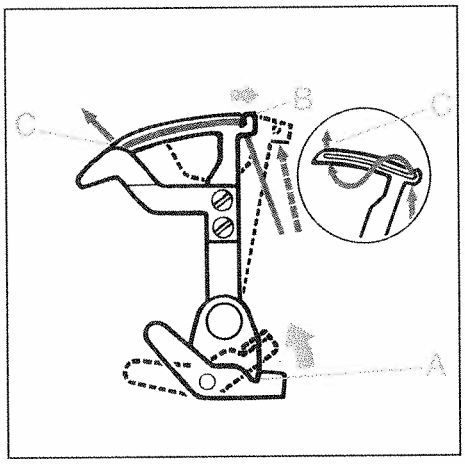

Thread from the front through the eye **C** of the two thread chainstitch looper and the cover stitch looper.

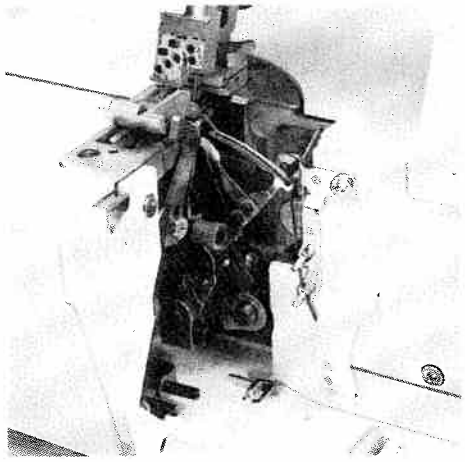

Pull approximately 4" (10 cm) of thread through the looper and place it to the left under the presser foot.

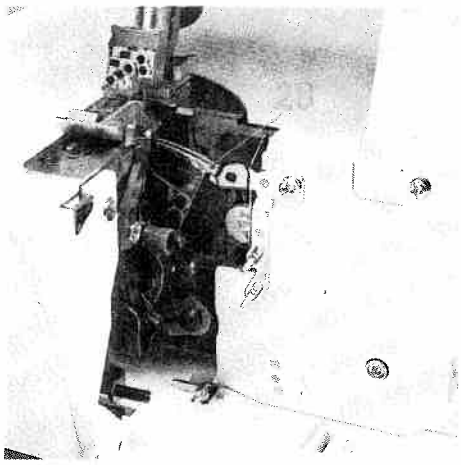

Exception:

Threading the two thread chainstitch looper and cover stitch looper for the cover stitch (violet)
(Prog. 1, 2, 3)

Turn the handwheel towards you until the two thread chainstitch looper **28** is on the extreme right.

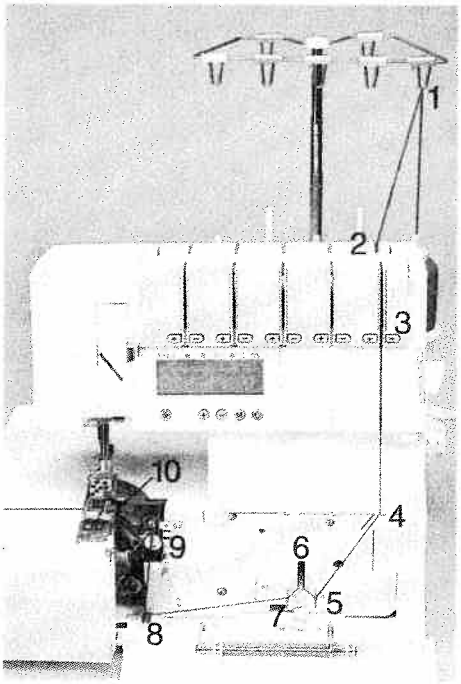

Thread in a sequence of **1 to 10**.

Note:

To make this task easier, use the tweezers which can be found behind the swivel plate.

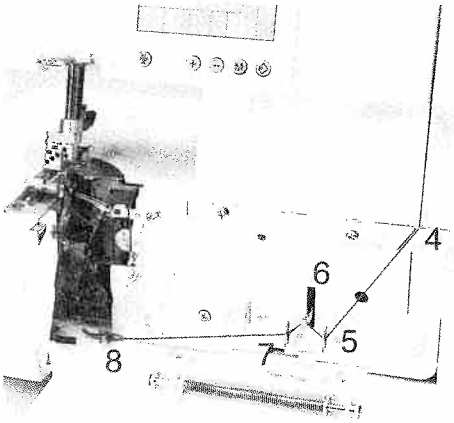

Thread the thread guides, as shown in the diagram, in a sequence of **1 to 8**. Some of the threads guides are marked with a violet square.



Press lever **A** upward and hook the thread into slot **B**. Also refer to the drawing below.

Note: The lever returns automatically to its position as soon as you start sewing.

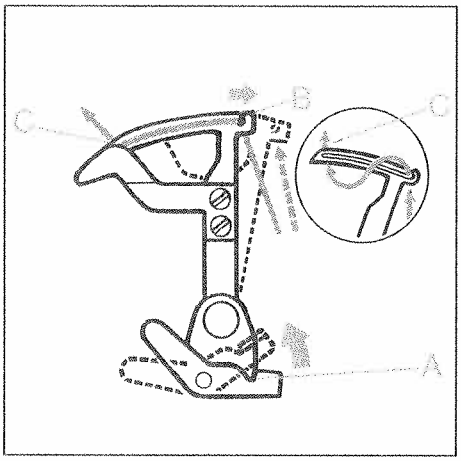

Thread from the front through the eye of the two-thread chainstitch looper and the cover stitch looper **C**.

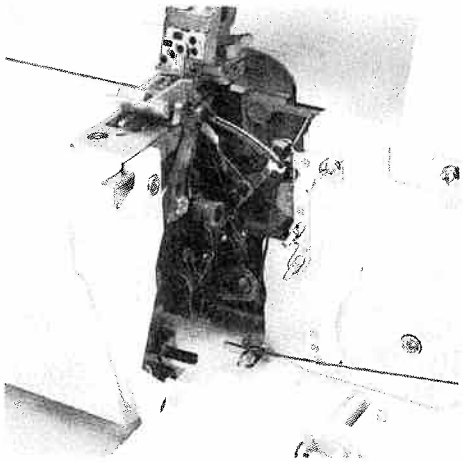

Pull approximately 4" (10 cm) of thread through the looper and place it to the left under the presser foot.

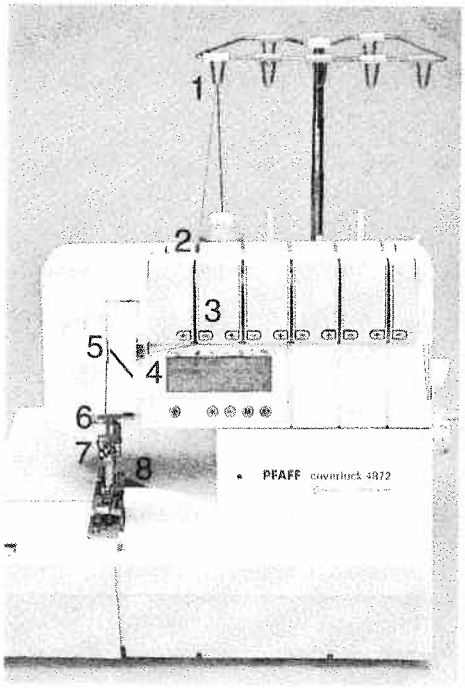

Threading the needles

Thread in a sequence of **1 to 8**.

Note:

To make this task easier, use the tweezers which can be found behind the swivel plate.

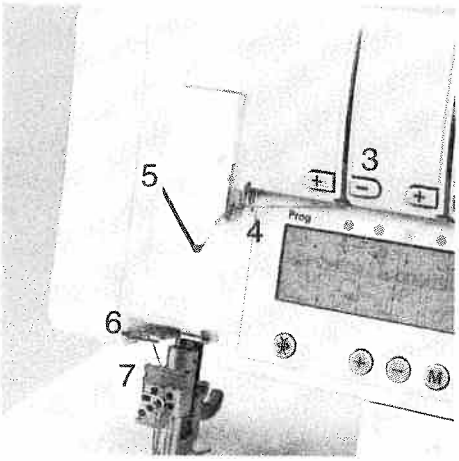

The thread must be guided through the **lower** slot of thread guide **5**.

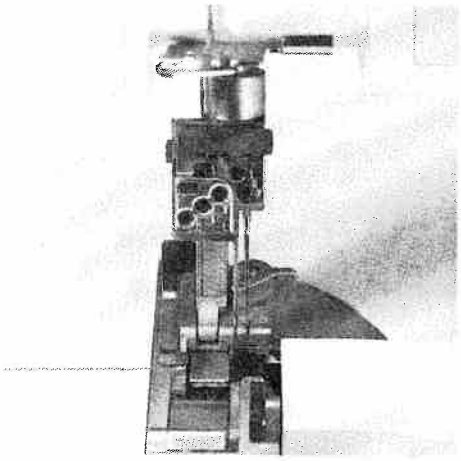

Pull approximately 4" (10 cm) of thread through the looper and place it to the left under the presser foot (if necessary activate tension release key **10**, also see page 40).

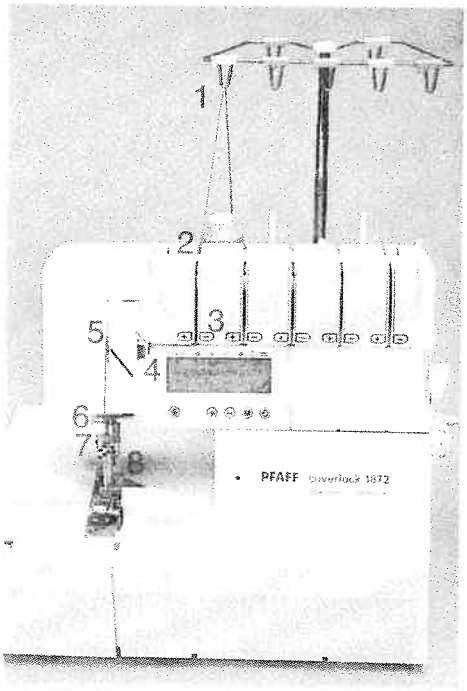

Exception:

Threading needle L2 when sewing a 5-thread safety-stitch seam (Prog. 20), a 4-thread safety-stitch seam (Prog. 19) and a 2-thread chainstitch (Prog. 4)

Thread in a sequence of **1 to 8.**

Note:

To make this task easier, use the tweezers which can be found behind the swivel plate.

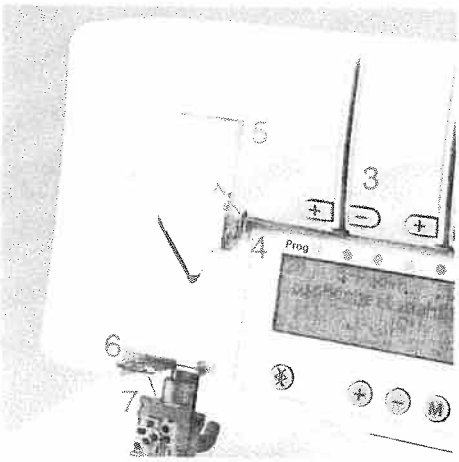

The thread must be guided through the **upper** slot of the thread guide **5.**

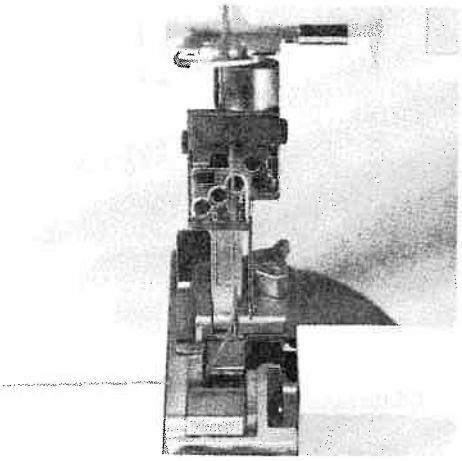

Pull approximately 4" (10 cm) of thread through the looper and place it to the left under the presser foot (if necessary activate tension release key 10, also see page 40).

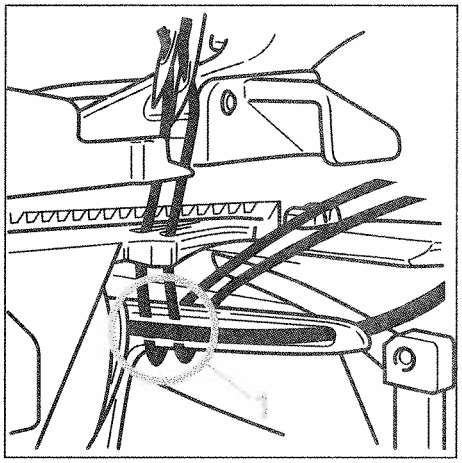

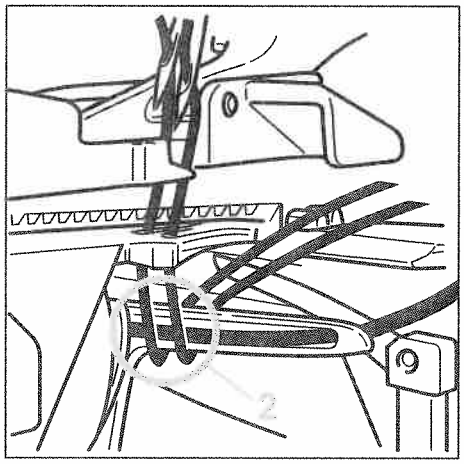

Important note on threading

The needle(s) must always be threaded last so that the needle threads do not run under the looper thread as seen in drawing 1, but instead over the looper thread as depicted in drawing 2. Should this sequence not be followed, thread breakage or missed stitches can occur.

If the looper threads break, you must pull the needle threads out of the needle, rethread the looper thread and then rethread the needle threads.

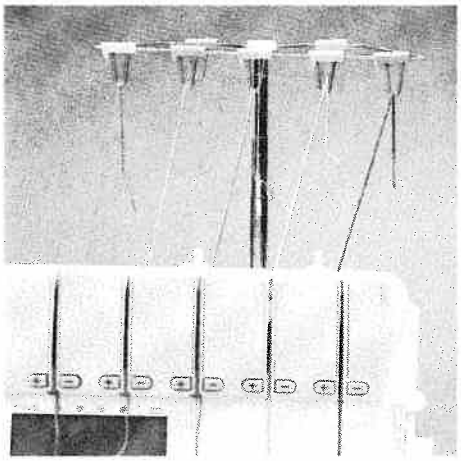

Changing a spool on a threaded machine

Cut the threads off close to the spool and replace with new spools. Tie together the threads which are still in the machine with the new threads, and pull the threads out of the needles. Activate tension release key **10** (also refer to page 40). Pull on the needle threads until the knots are about 6 inches (15 cm) past the last thread guide in front of the needles. Cut the knots off and pull the threads through the respective needle eyes. The looper threads can be pulled continuously past the looper eye and placed to the left underneath the presser foot.

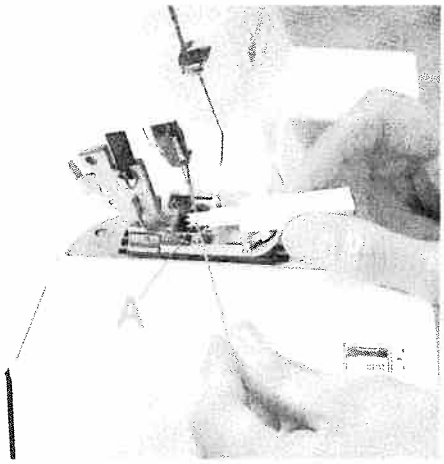

Needle threader

Move the needle(s) into the highest position and lower the presser foot. Place the thread from right to left in notch **A** of the needle threader (to be found in the accessory box). One of the two triangles must point upwards.

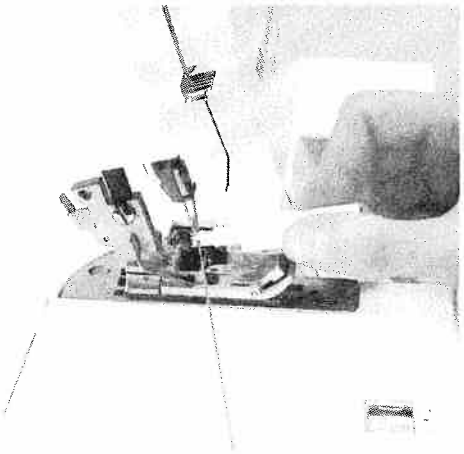

Place the needle threader onto the front groove of the needle. Slide the needle threader down to the needle eye and press it lightly against the needle.

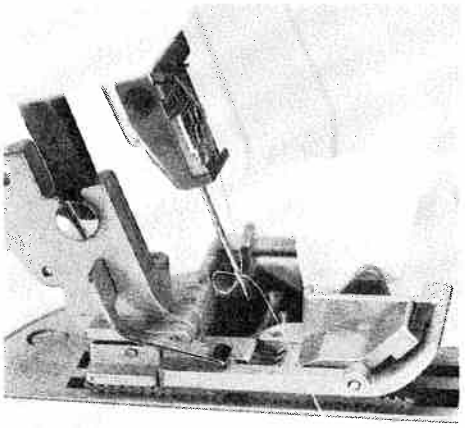

A small metal pin is pushed through the needle eye and the needle is automatically threaded. Thread loops must be pulled to the back.

Overview of the threading paths and threading sequences

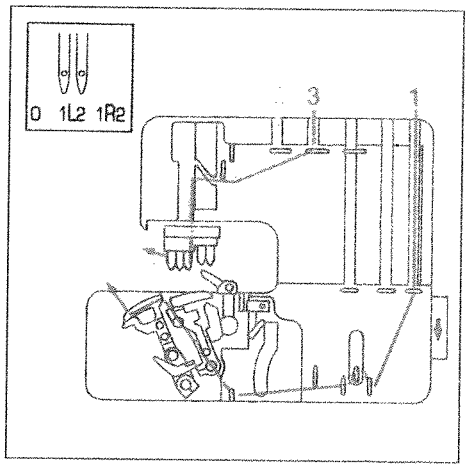

Program 01:
cover stich, 2-needle, narrow

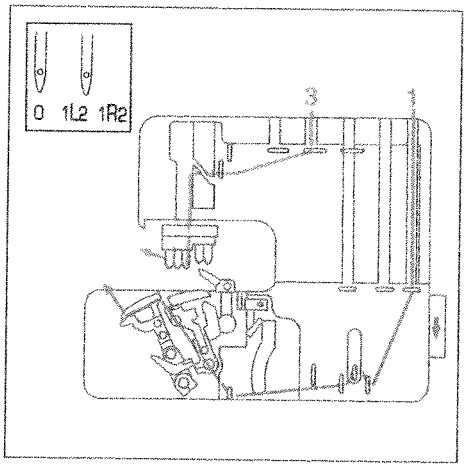

Program 02:
cover stitch, 2-needle, wide

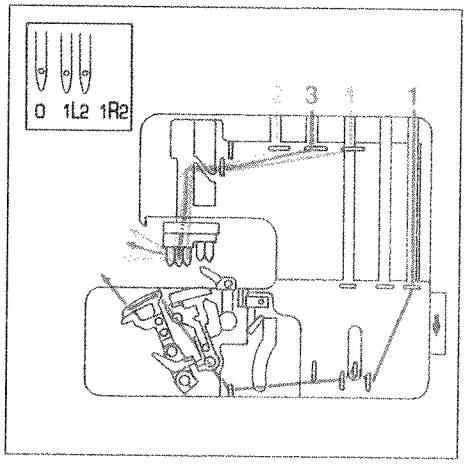

Program 03:
cover stitch, 3-needle 4-thread

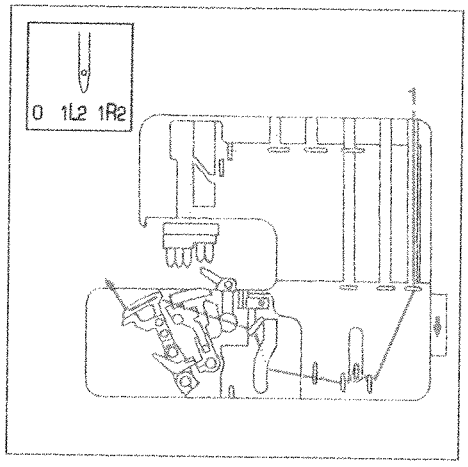

Program 04:
2-thread chainstitch

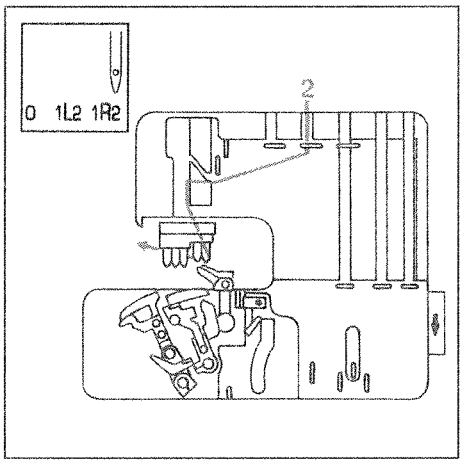

Program 05:
2-thread flatlock, narrow

Program 07:
narrow 2-thread serging

Program 08:
2-thread flat hem

Program 09:
folded 2-thread rolled hem

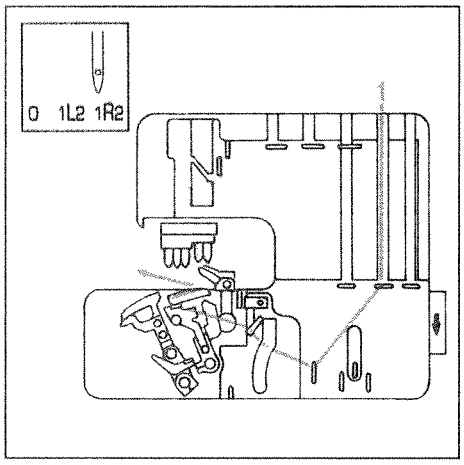

Program 06:
2-thread flatlock, wide

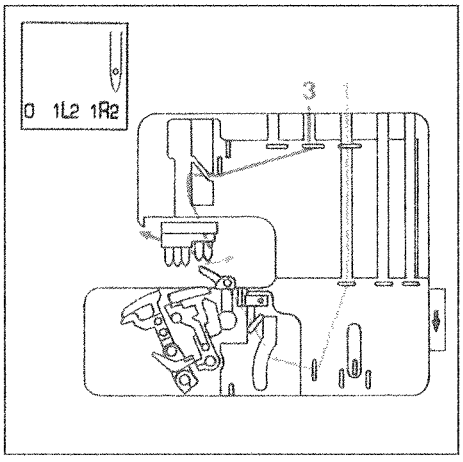

Program 10:
3-thread overedge, narrow

Program 16:
3-thread flat hem

Program 17:
folded 3-thread rolled hem

Program 13:
3-thread flatlock, narrow

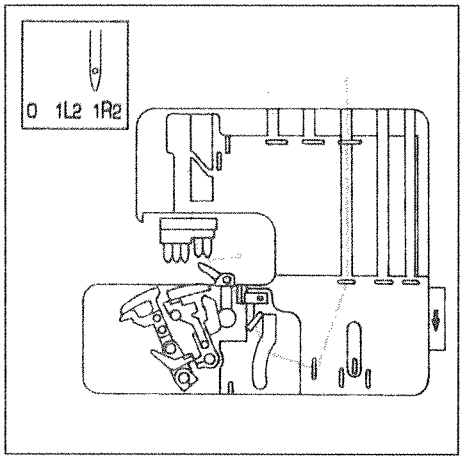

Program 11:
3-thread overedge, wide

Program 12:
wide 3-thread serging seam

Program 14:
3-thread flatlock, wide

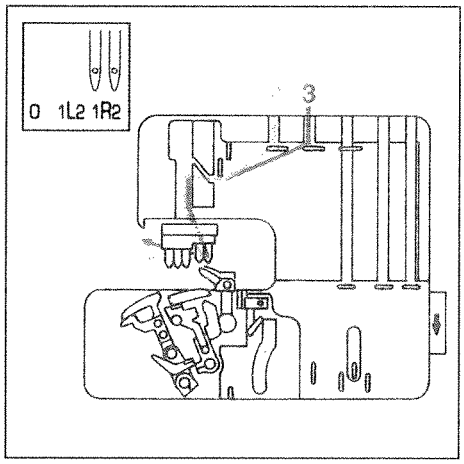

Program 15:
2-needle 3-thread overedge seam

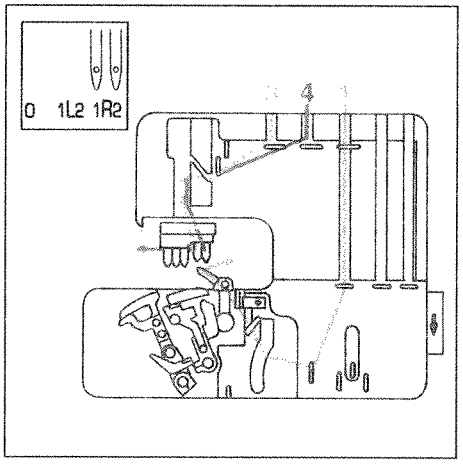

Program 18:
4-thread overedge seam

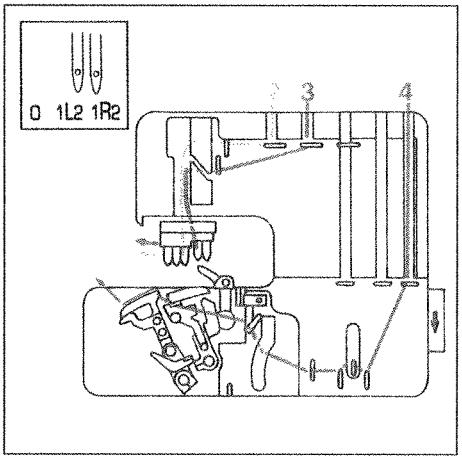

Program 19:
4-thread safety-stitch seam

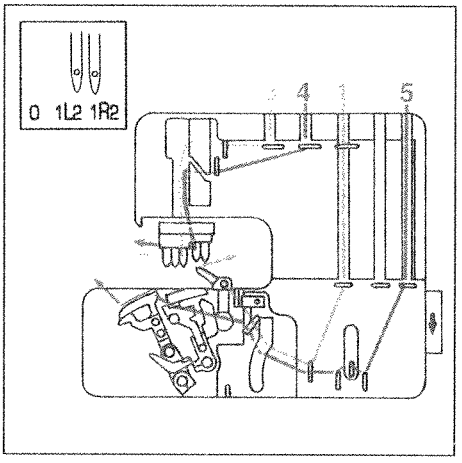

Program 20:
5-thread safety-stitch seam

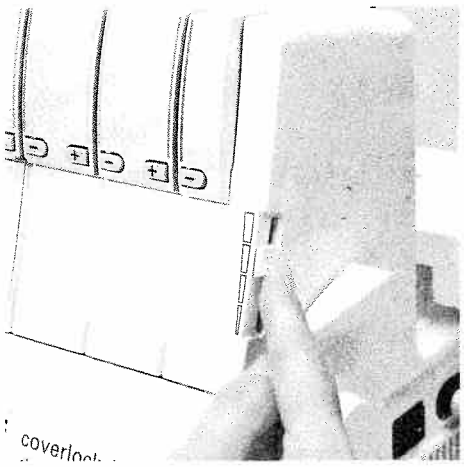

Sewing speed pre-selection

Using sewing-speed pre-selection slide **9**, the maximum speed can be adjusted anywhere between 700 rev/min. and 1500 rev/min.

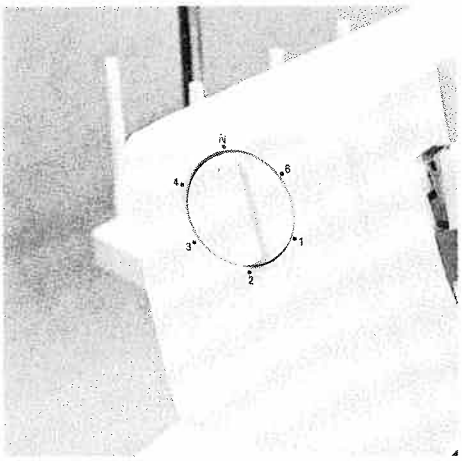

Presser foot pressure

The pre-set presser foot pressure on the machine is suitable for medium-heavy fabrics. The presser foot pressure does not need to be adjusted for most fabrics. If you are working with light or heavy fabrics then you may need to adjust the pressure. In this case, 6 setting positions are available which you can select using the adjusting knob for the presser foot pressure **24**. The standard setting is "**N**".

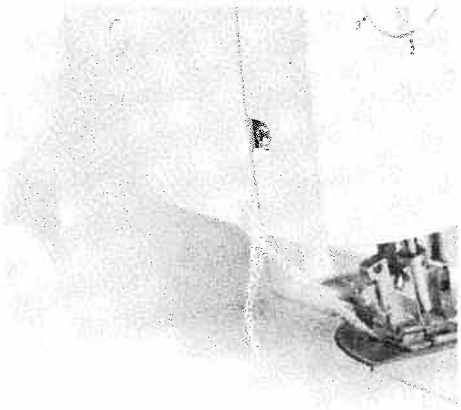

Thread chain cutter

After finishing the seam, sew an approx. 6" - 8" (15 -20 cm) long thread chain. Pull the thread chain from the back to the front over the thread chain cutter **40**. This will cut off the thread chain.

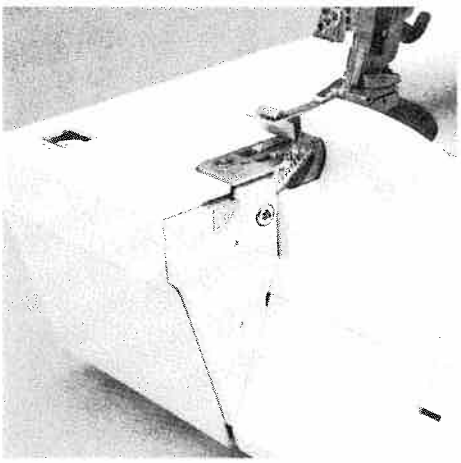

Clamp spring for serging thread chain 32

Using this feature you can serge the thread chain at the start of the fabric, by pulling it into the seam. Stitch off a minimum 4" (10 cm) long thread chain and raise the presser foot. Remove the thread chain carefully from the swiveling stitch width latch **27**. Pull the thread chain forwards and clamp it under the spring.

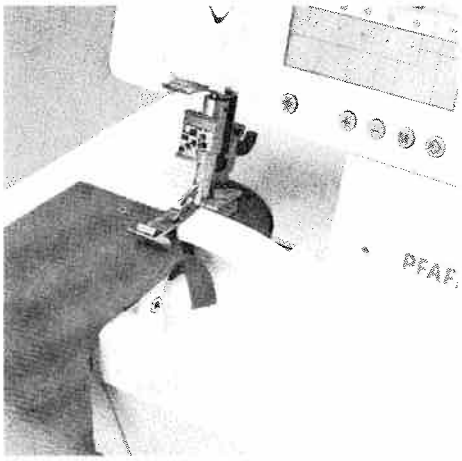

Place the fabric right in front of the needle(s). If necessary, make an approx. 1.5" (3 cm) cut into the fabric along the cut-line using a pair of scissors. Lower the presser foot and start sewing. The thread chain pulls automatically into the inside of the seam.

Note:

This feature cannot be used for either the five-thread safety-stitch seam, the four-thread safety-stitch seam, the two-thread chainstitch or for the rolled hem.

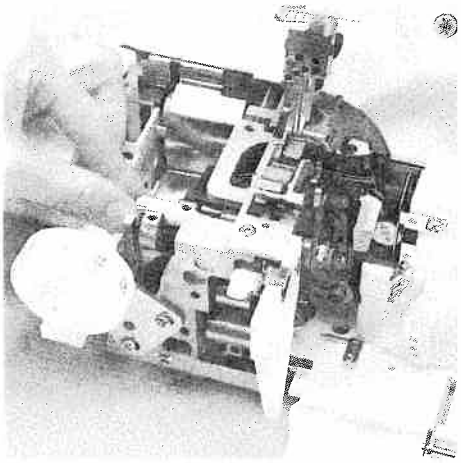

Disengaging the upper blade

Switch off the electrical power

Move the movable upper blade **30** into its highest position by turning the handwheel. Remove the waste container and open the looper cover and the swivel plate. Now turn the handwheel fully to the right to lower the upper blade **34**.

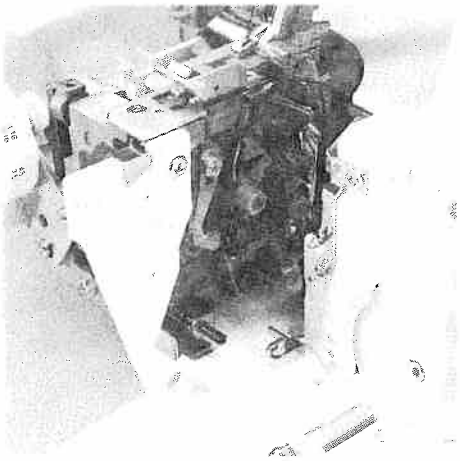

Turn the knob towards you until the upper blades clicks into place below. The upper blade is now disengaged.

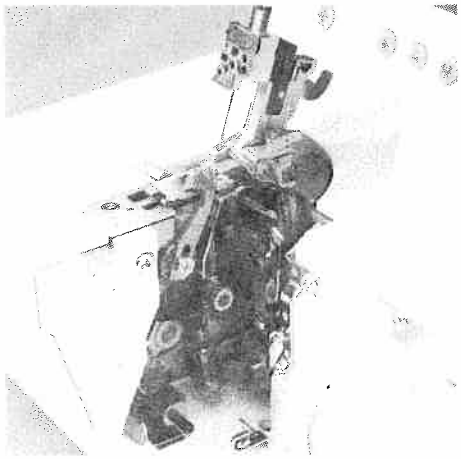

Engaging the upper blade

Push the knob for lowering the upper blade to the right and swivel back the blade until it clicks into the operating position again. Close the looper cover and the swivel plate and remount the waste container.

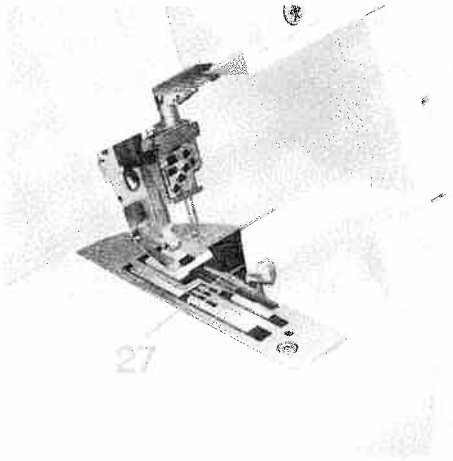

Swiveling stitch width latch

For standard overlock seams:

The swiveling stitch width latch **27** remains in the basic position when sewing all types of standard overlock seams (exception: program 1, 2, 3, 4).

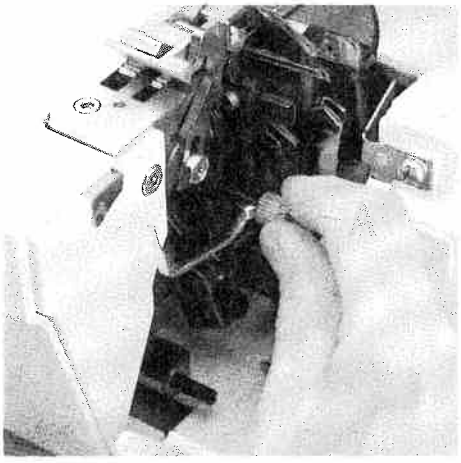

For rolled hems:

Pull the knob **(A)** to the right and swivel the swiveling stitch width latch **27** downwards.

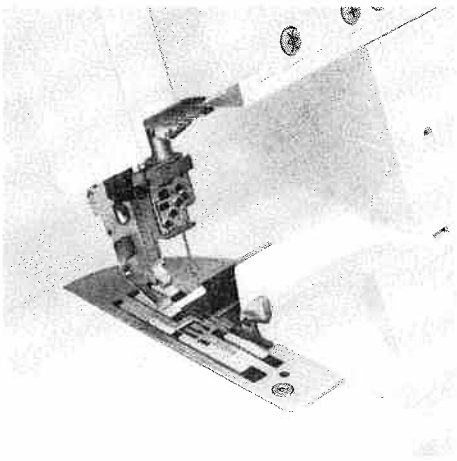

This setting allows you to sew all types of rolled hems.

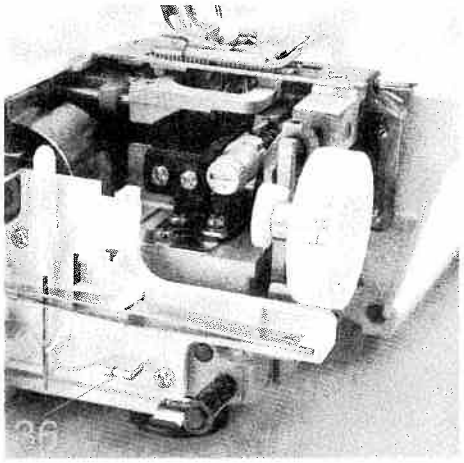

Attaching the converter

Switch off the electrical power

The converter **36** must be attached for all two-thread seams (exception: Program 4) and the two-needle three thread closing seam. Open the swivel plate and remove the converter **36** from its storage space.

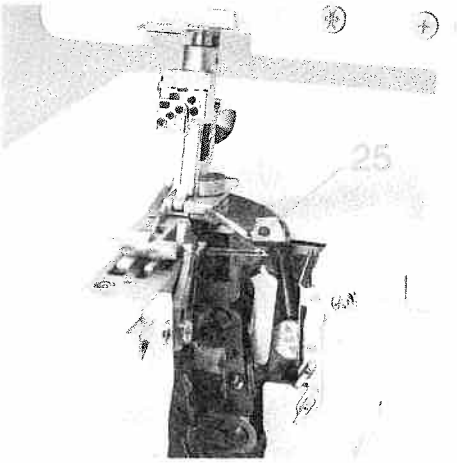

Position the upper overedge looper **25** right next to the needle by turning the handwheel towards you.

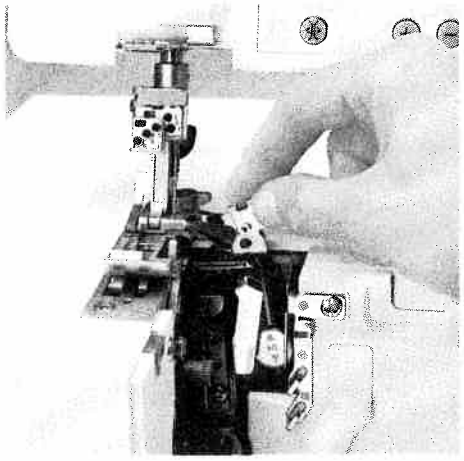

Push the tip of the converter into the back side of the eye of the upper overedge looper until it clicks into place and push the converter onto the overedge looper bracket.

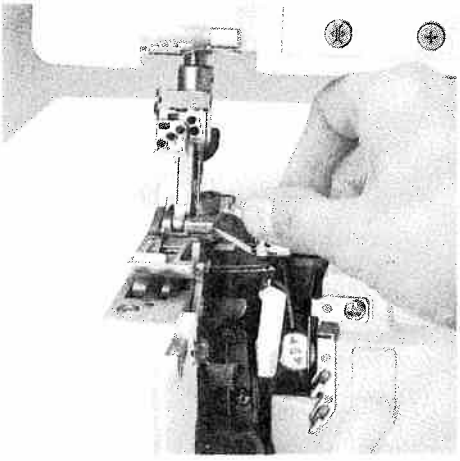

To remove the converter, gently push the point of the converter from the eye of the upper overedge looper. You can now remove the converter by pulling it upwards from the overedge looper bracket.

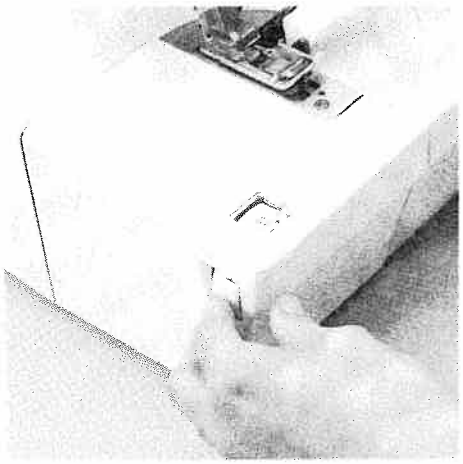

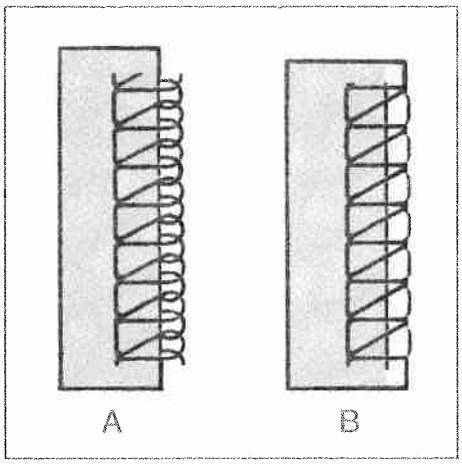

Setting the seam width

The required seam width can be adjusted anywhere between 3.5 and 6 mm by turning the adjusting knob for seam width **20**. The setting can be seen at the viewing window **21**. The two-thread chainstitch is sewn with a clearance of 6.5 to 9 mm.

Illustration A: Should loops project out of the workpiece, move the movable upper blade **30** to the right by turning the seam width adjusting knob upwards.

Illustration B: Should the stitching be too tight, move the movable upper blade to the left by turning the seam width adjusting knob downwards.

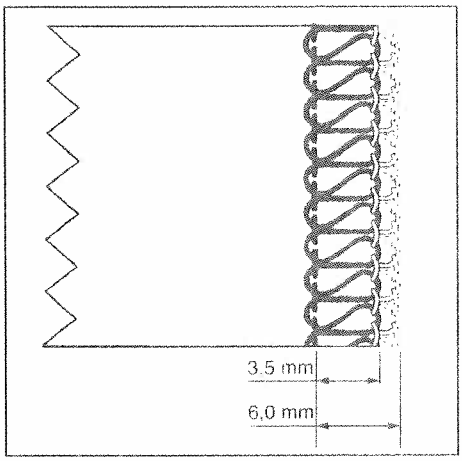

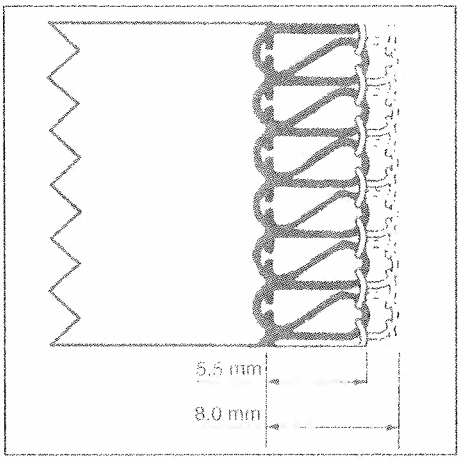

Note:

The seam width settings 3.5 mm and 6.0 mm are only relevant for **needle R2**. This set-value is increased by 2.0 mm when using **needle R1**, i.e. you have a seam width which is completely adjustable from 5.5 mm to 8.0 mm.

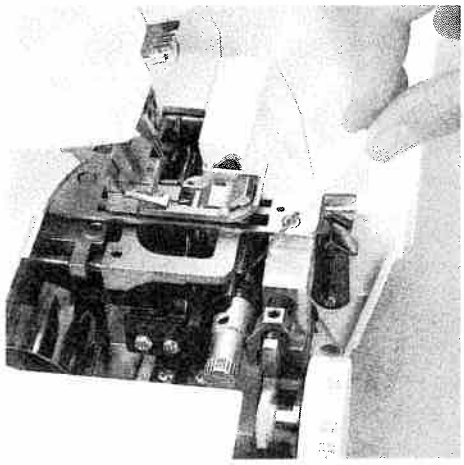

Securing the upper blade

Switch off the master switch

It is recommended to secure the movable upper blade **30** before sewing heavy fabrics. Raise the needle(s) to its highest position and open the swivel plate. Tighten the screw fully using the Allen key. This screw should always be slightly loosened again after sewing heavy fabrics.

Note:

The seam width can no longer be adjusted once the upper blade is secured.

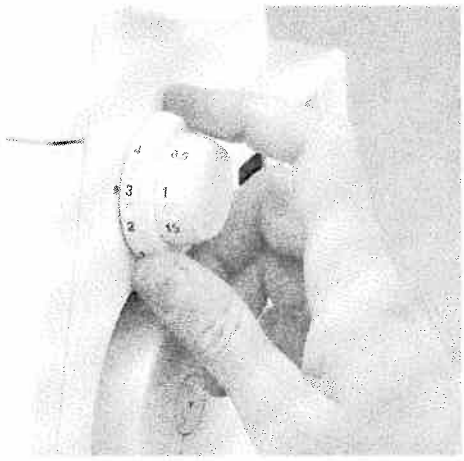

Adjusting the stitch length

You can set the desired stitch length between 0.5 mm to 4.0 mm by turning the stitch length adjustment knob **50**.

Note:

For the two-thread chainstitch, the setting should be 3.0 or higher.

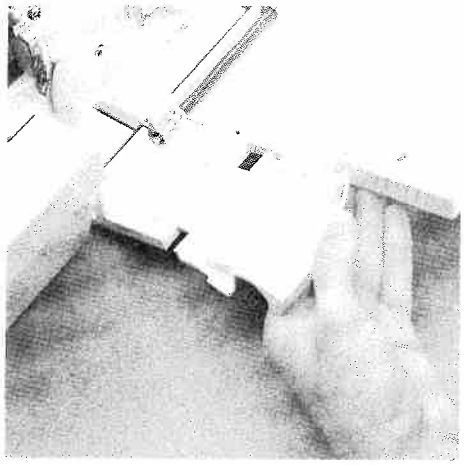

Adjusting the machine to the cover stitch (Prog. 1, 2, 3) and two thread chainstitch (Prog. 4)

This is only necessary if you do not want to trim the fabric edge. Insert the needle(s) according to the **LCD display** (see page **13**). Open the looper cover and remove the blade guard **15** by pulling it towards you.

Lower the swiveling stitch width latch (see page **32**) and disengage the upper blade (see page **31**). Ensure that the upper blade is disengaged by turning the handwheel.

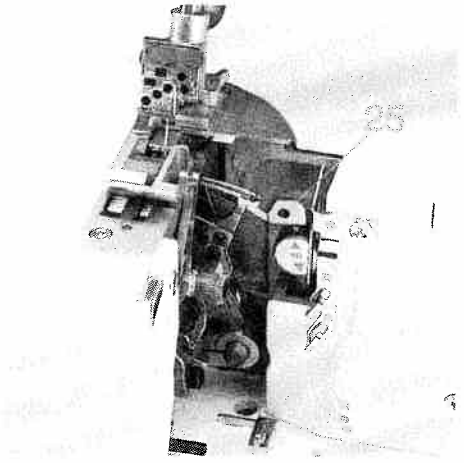

Disengage the upper overedge looper. Move the upper overedge looper **25** into its lowest position by turning the handwheel.

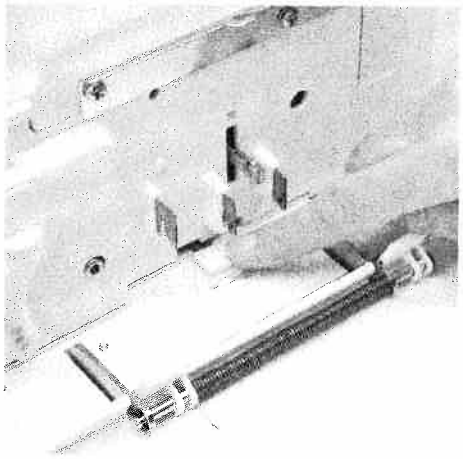

Move the looper disengaging lever **16** to the left. Ensure that the looper is disengaged by turning the handwheel.

Thread the two thread chainstitch looper and the cover stitch looper (see pages **18 to 21**) and then the needle(s) (see page **22 and 23**).

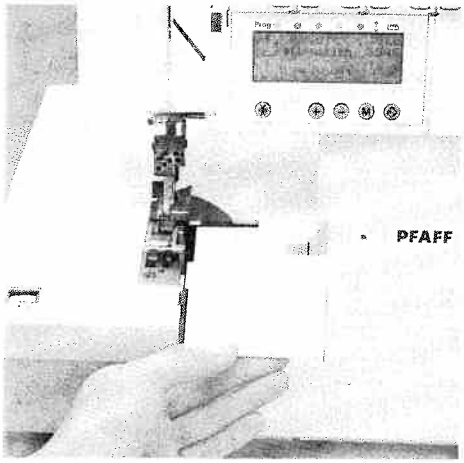

Press the power table **57** downwards into the designated slot on the looper cover. Close looper cover.

Note:

Please ensure that the upper overedge looper is disengaged before attaching the power table **57**.

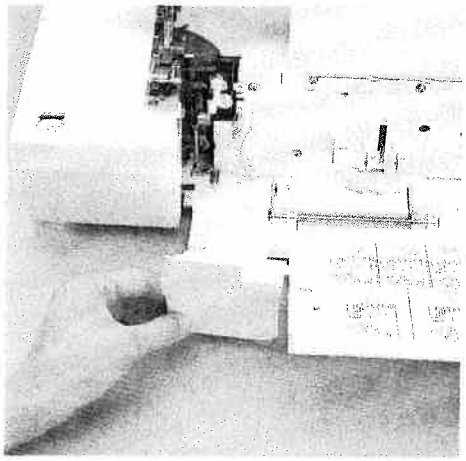

To return the machine to its previous settings after sewing with the cover stitch or two thread chainstitch.

Open the looper cover and remove the power table.

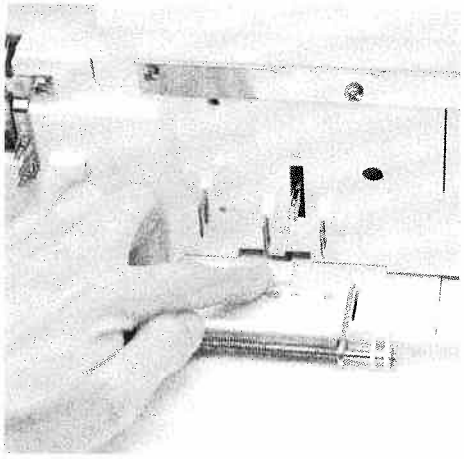

Move the looper disengaging lever to the right, thus re-engaging the upper overedge looper.

Bring the swiveling stitch width latch into the basic position (see page **32**) and engage the upper blade (see page **31**).

Push the blade guard into the looper cover and close it.

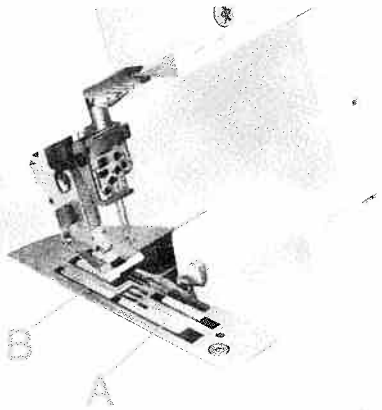

Differential feed

The differential feed consists of two feed dogs **(A + B)**, one behind the other, which feed the fabric. The movement of the front feed dog **(A)** and thus the amount of material to be fed can be regulated using the regulator wheel **49**. The setting range is between 0.5 and 2.0.

The **standard setting** is 1.0, where the movement of the front feed dog **(A)** is synchronized with the rear feed dog **(B)**. This means that the front feed dog feeds the same amount of fabric as the rear feed dog.

Note:

The function of the differential feed is independent of the set stitch length and the type of fabric being used.

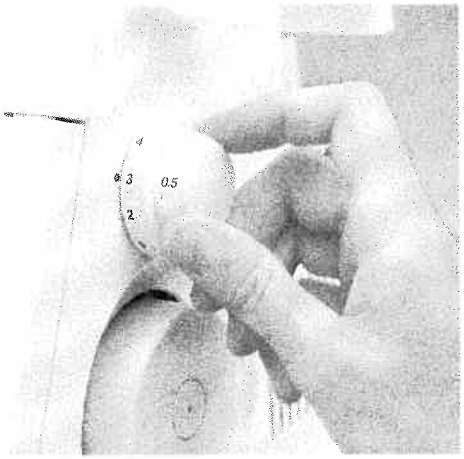

Set the regulator wheel for the differential feed **49** to 0.5. Here the front feed dog feeds half as fast as the rear feed dog. This means that the front feed dog feeds only half as much fabric as the rear feed dog, causing the fabric to **stretch**.

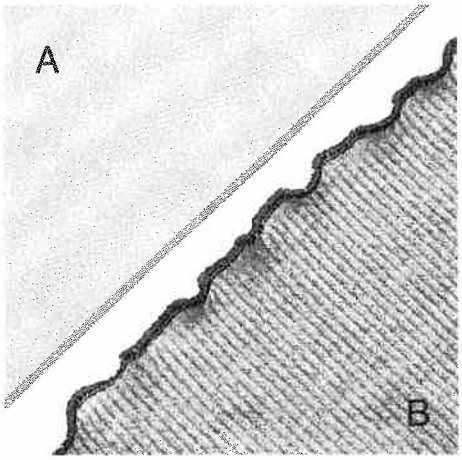

Here you will avoid ruffling in the seam when working with very light fabrics, such as silk and taffeta. Instead, a smooth seam **(A)** will be achieved.

You can also achieve fashionable effects with the differential feed dog, for example the wavelike effect when using a rib knit **(B)**.

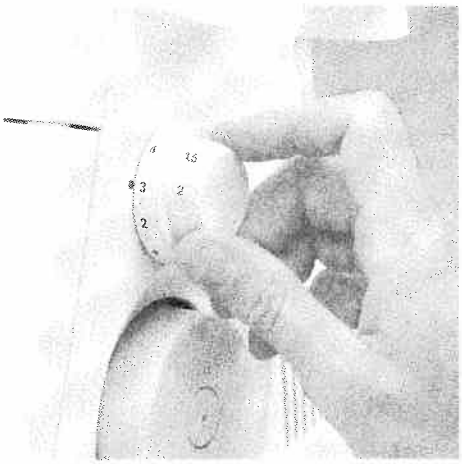

Set the regulator wheel for the differential feed **49** to 2.0.

Here the front feed dog feeds twice as fast as the rear feed dog. This means that the front feed dog feeds twice as much fabric as the rear feed dog, causing the material to **gather**.

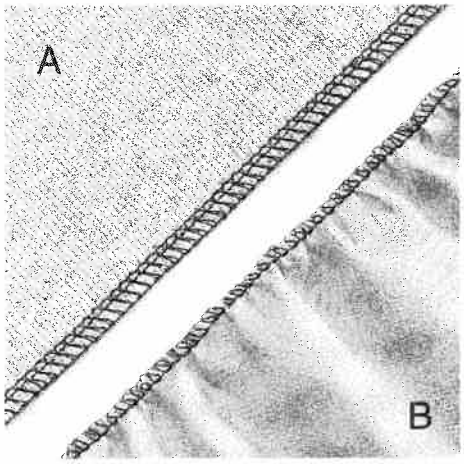

Here you will avoid stretching in the seam when working with knitwear, such as jerseys or gathered fabrics. Instead, a smooth seam **(A)** will be achieved.

You can also achieve fashionable effects with the differential feed dog, for example the gathering effect when using very light fabrics **(B)**.

The following table contains information on the differential feed settings. However, you should always test your setting first on a piece of scrap fabric.

Type of fabric / effect	Differential feed setting gather <2>	normal <1>	stretch <0.5>
Very light fabrics: silk, satin, poplin, taffeta, linings.		●	●
Normal fabrics: light and medium-heavy cottons, fine cords, thermal-wear.		●	
Light knitwear: jerseys, polo fabrics, cut-pile pullovers, tricot, fine knitwear and gathered fabrics.	●	●	
Heavy knitwear: sweatshirt fleece, heavy gathered fabrics, heavy knitwear.	●		
Stretch - wavelike effect: medium and light knitwear, jerseys, knitwear, ruffled sleeve and collar edges, skirt hems, dense stitch lengths.			●
Gathering: ruffling light materials and lace, seam allowances for curves, arches on blouses, shirts, skirts, round pockets, flaps, stretching or gentle ruffling of arched sleeves (shoulders), sleeve widths for cuffs or gathered fabrics.	●		

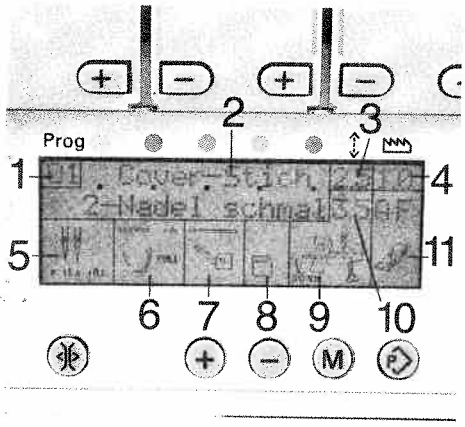

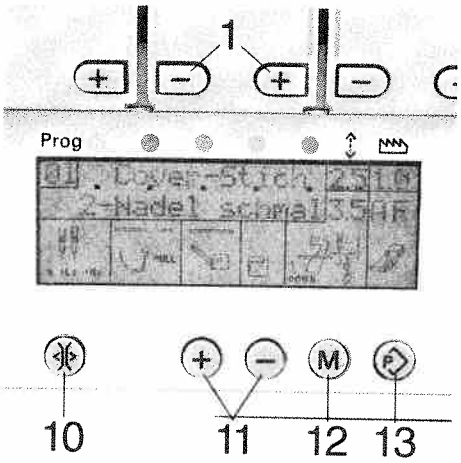

LCD Display

1 Program no.
2 Name of stitch
3 Stitch length in mm
4 Differential feed setting
5 Needle position
6 Swiveling stitch width latch position
- stitch width latch in basic position
- stitch width latch lowered

7 Upper overedge looper position
- looper engaged
- looper lowered
- Converter engaged

8 Power table position
- with power table
- without power table

9 Upper blade position
- upper blade engaged
- upper blade disengaged

10 Seam width in mm
11 Setting of spring presser foot latch **A** or **B** – As long as **E** appears in the display, the transparent presser foot from the accessories can also be used.

Key functions

1 **Tension keys + and -**
For increasing and reducing thread tension

10 **Tension release key**
When this key is pressed and held, the thread tensions are released. This allows the thread chain to be easily pulled from the machine. When the key is released, the thread tensions reset for the programm selected.

11 **Program selection key + and –**
The desired program can be selected with these keys. There are 20 programs preset for your use. If the keys are kept pressed down, the programs will automatically run on. When the machine is switched off and back on, the last program sewn will appear.

12 **Memory key M**: The adjusted settings for stitch length, differential feed and thread tension can be stored using this key.

13 **Memory selection key P**: With this key, you can activate the program memory and
the programmable memories A, B and C.

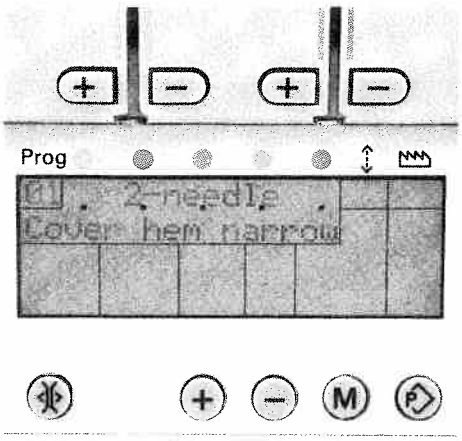

Choice of language

The following languages can be selected: Czech, Danish, German, English, Spanish, French, Italian, Dutch, Polish, and Portuguese.

Keep both the + and – keys pressed down simultaneously and switch on the machine. The desired language can then be selected using the + and – keys. Program the desired language by pressing the memory key **M** once.

Each description will then appear in the selected language.

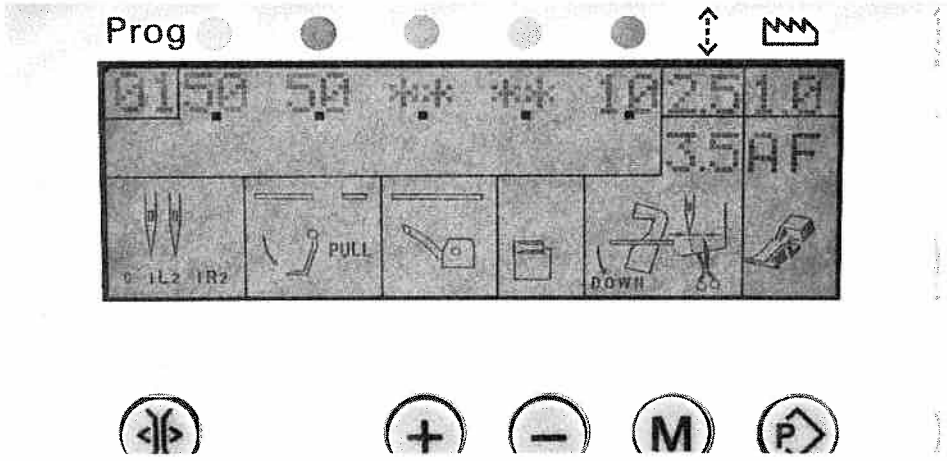

Activating the stitch programs programmable memories

Activate the desired program using the program selection keys + and -. By pressing the memory selection key **P** once, you can activate the program memory. The set tensions appear on the display. The tensions, marked with ** are not valid for this program, i.e. these tensions must not be threaded. If there is no change made within 10 seconds, the name of the program will appear on the display again.

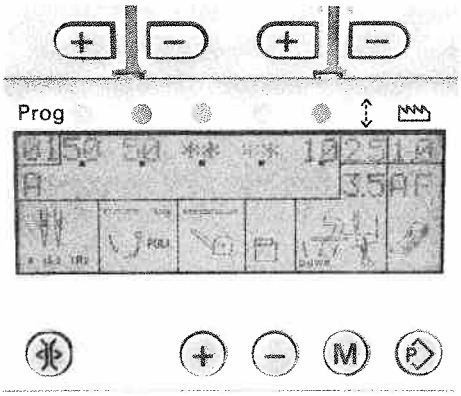

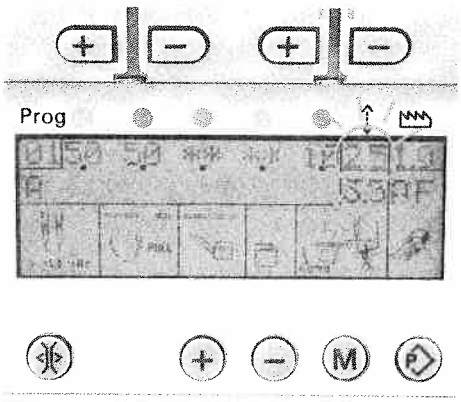

Changing and storing the stitch length setting

Activate the desired program using the program selection keys + and -. Press the memory selection key **P** until the memories A, B or C appear on the display. By pressing the memory key M, the stitch length display will flash. Using the program selection key +, you can adjust the stitch length. The changed stitch length can now be stored by pressing the memory key M.

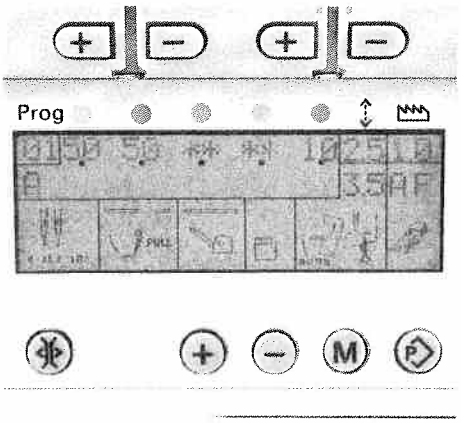

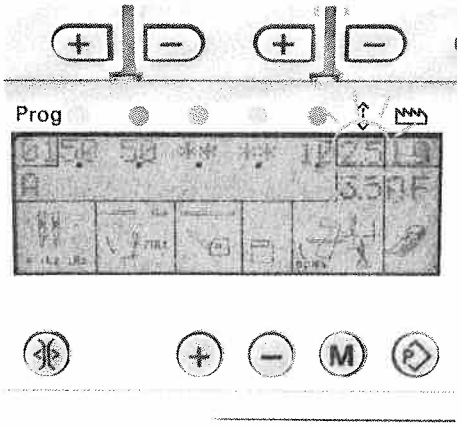

Changing and storing the differential feed setting

Activate the desired program using the program selection keys + and -. Press the memory selection key **P** until the memories A, B or C appear on the display. By pressing the memory key **M**, the stitch length display will flash. Using the program selection key -, activate the differential feed display i.e. the differential feed display will flash. Using the program selection key +, the differential feed can now be adjusted and then stored by pressing the memory key **M**.

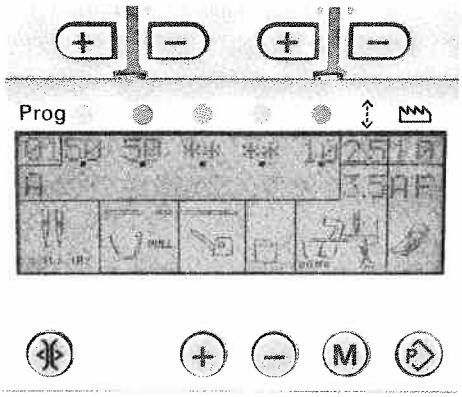

Changing and storing the stitch length, differential feed and tension settings

Activate the desired program using the program selection keys + and –. Press the memory selection key **P** until the memories A, B or C appear on the display. By pressing the memory key **M**, the stitch length display will flash. Using the program selection key +, the stitch length can be changed. Using the program selection key –, the differential feed display will be activated and the differential feed can be changed using the program selection key +. The tension settings can be adjusted in increments of two using the tension keys + and –. The adjusted settings can be stored using the memory key **M**.

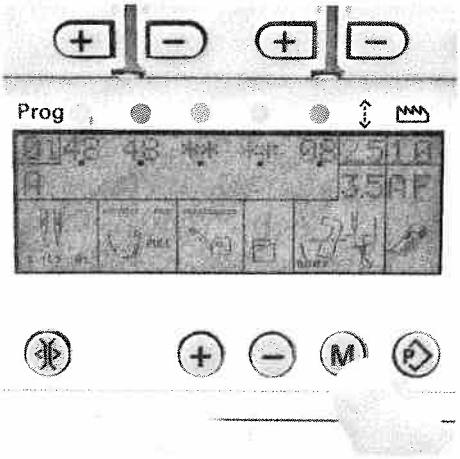

Storing only adjusted tension settings

Select the desired memory using the memory selection key **P**. Change the tension and press the memory key **M** twice.

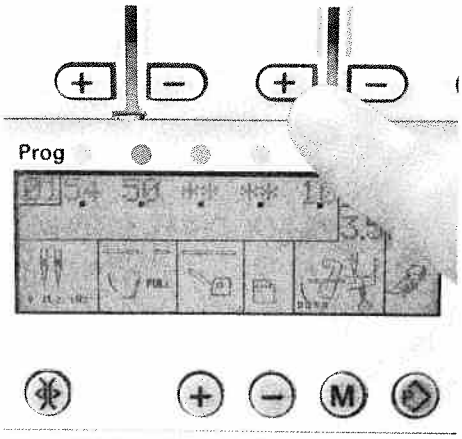

Adjusting the tension without storing

If you would like to adjust the tension e.g. whilst sewing, without having to store this adjustment, simply press one of the tension keys + or –. All tensions can now be adjusted as desired.

Notes on storing in programmable memories

If the memory selection key **P** is not pressed while storing, the new settings will automatically be stored in a free memory using the memory key **M**.

If all the memories are occupied, the new settings will not be accepted. Single memories can not be deleted, only overwritten.

Deleting all the programmable memories

Switch off the machine. Press the program selection keys + and - as well as the memory key **M**. Keep the keys depressed and switch the machine back on. All the memories will be deleted.

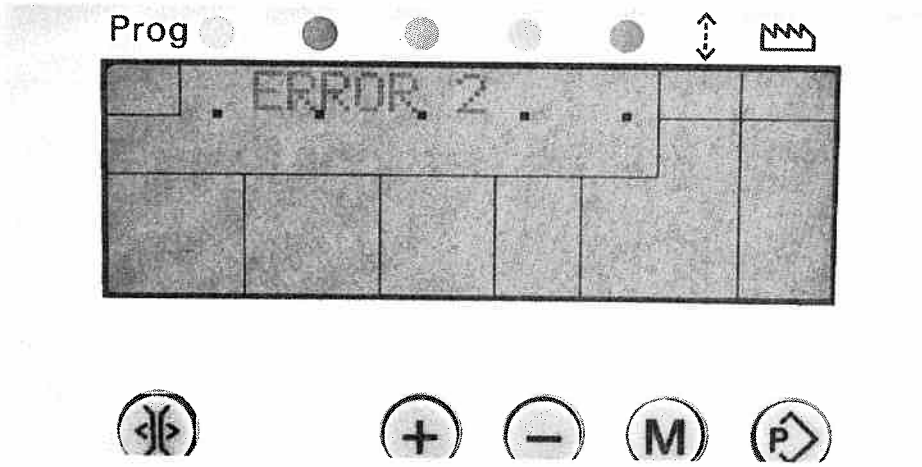

Error

If one of the stepping motors for the thread tension adjustment fails, "ERROR" will appear on the display. Error 2 means: the second stepping motor of the green needle thread tension does not function. If "ERROR" appears on the display after having switched the machine off and back on again, your machine must be taken to your authorized PFAFF dealer for service.

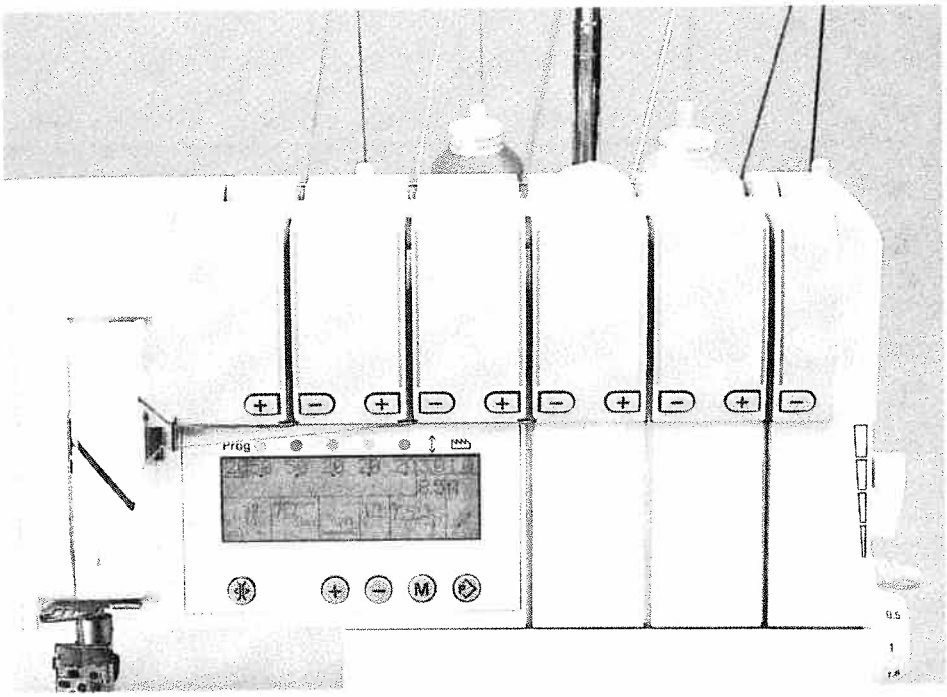

Setting thread tension

This machine offers automatic setting of the thread tension for each separate program.

As the type of fabric, thread quality and needle size vary and can greatly influence the seam quality, the setting of the thread tensions may require slight adjustments.

Changing the tension settings is described on page 43.

Tip

Always sew off a test seam on a piece of scrap fabric and check the thread loops. Adjust the thread tension if necessary (see pages 49 - 62).

Program overview **Program**	**Area of application**
Program 01 Cover stitch 2-needle, narrow 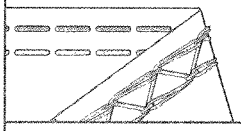	Sewing hems and fancy stitches.
Program 02 Cover stitch 2-Nadel, wide 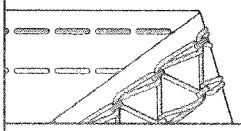	Sewing hems and fancy stitches.
Program 03 Cover stitch 3-needle, 4-thread 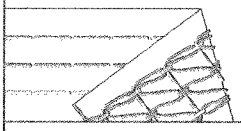	Sewing hems and fancy stitch.
Program 04 Two thread chainstitch 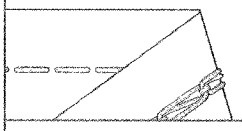	Joining fabric layers where a traditional pressed-open seam is required. Also works well as a basting stitch for test-fitting garments.
Program 05 2-thread flatlock, narrow 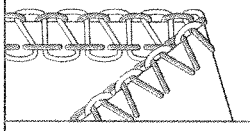	Serging light fabrics. Joining stretch fabrics with a flatlock seam.
Program 06 2-thread flatlock, wide 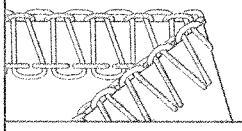	Serging medium-heavy fabrics. Joining stretch fabrics with a flatlock seam.
Program 07 2-thread narrow serging seam 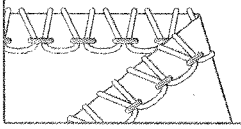	Serging light fabrics.

Program overview

Program	Area of application
Program 08 2-thread flat hem 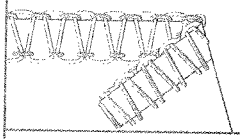	Serging very light fabrics. Decorative edges.
Program 09 Folded 2-thread rolled hem 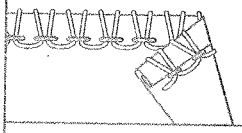	Serging very light fabrics. Decorative edges.
Program 10 3-thread overedge narrow 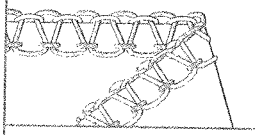	Serging light (easily frayed) fabrics.
Program 11 3-thread overedge wide 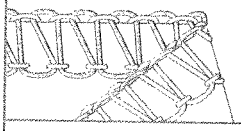	Serging tightly woven (easily frayed) fabrics.
Program 12 wide 3-thread serging seam 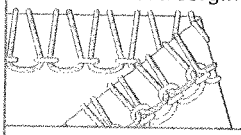	Serging tightly woven (non-fraying) fabrics.
Program 13 3-thread flatlock, narrow 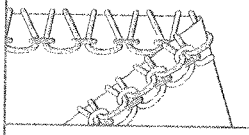	Serging medium-heavy fabrics. Joining stretch fabrics with a flatlock seam and decorative edges.
Program 14 3-thread flatlock, wide 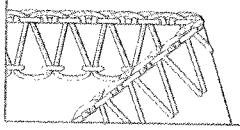	Joining fabrics with a flatlock seam and decorative edges.

Program overview **Program**	**Area of application**
Program 15 2-needle, 3-thread overedge seam 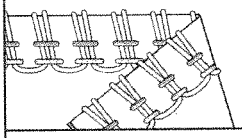	Joining and simultaneous serging of light, very stretchy fabrics.
Program 16 3-thread flat hem 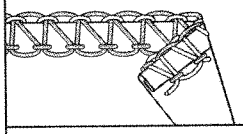	Serging light to medium-heavy fabrics. Decorative edges.
Program 17 Folded 3-thread rolled hem 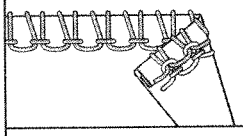	Serging light to medium-heavy fabrics. Decorative edges.
Program 18 4-thread overedge seam 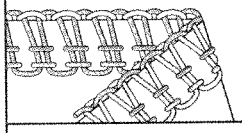	Joining and simultaneous serging of all-fabrics, in particular stretchy fabrics.
Program 19 Wide 4-thread safety-stitch seam 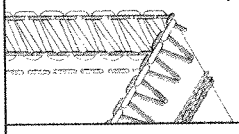	Joining and simultaneous serging of tightly woven fabrics.
Program 20 Wide 5-thread safety-stitch seam 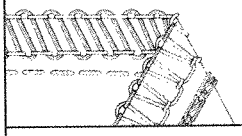	Joining and simultaneous serging of tightly woven fabrics.

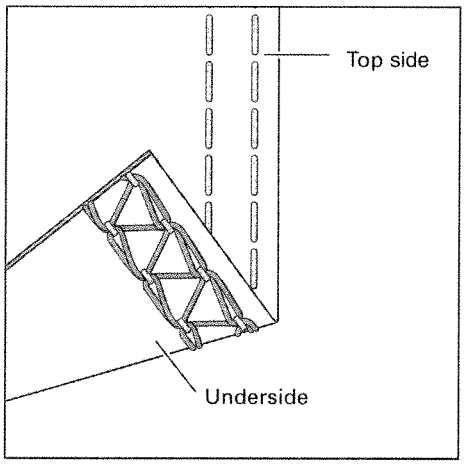

Stitch formation correction measures cover stitch, 2-needle, narrow and wide Program 01, 02

When all tensions are correctly set, the needle threads (green and blue) are just slightly visible on the underside of the fabric. The looper thread (violet) is situated loosely in between.

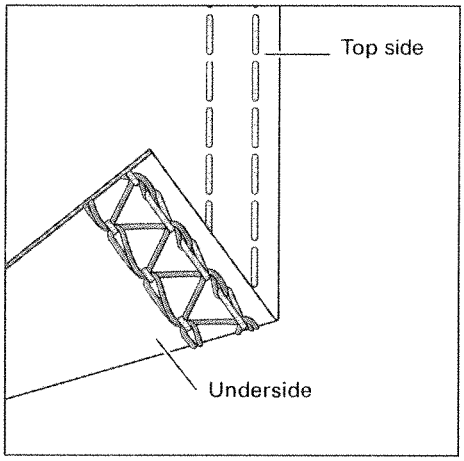

The right needle thread (green) is too loose, causing large loops on the underside of the fabric.

Set the green thread tension to a higher value.

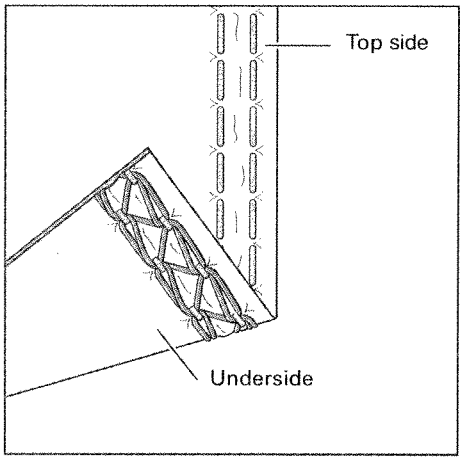

The needle threads (green and blue) are set too tightly causing folds in the fabric.

Set the green and blue thread tension to a lower value.

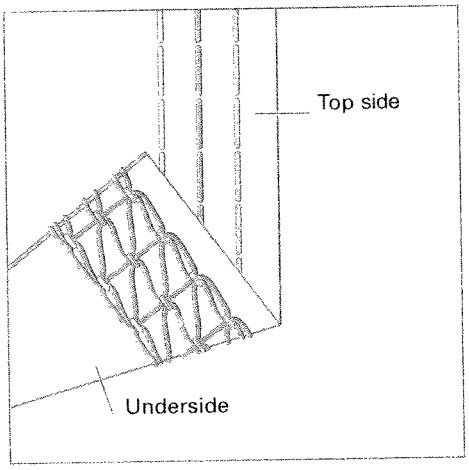

Cover stitch, 3-needle 4-thread

Program 03

When all tensions are correctly set, the needle threads (green, blue and pink) are just slightly visible on the underside of the fabric. The looper thread (violet) is situated loosely in between.

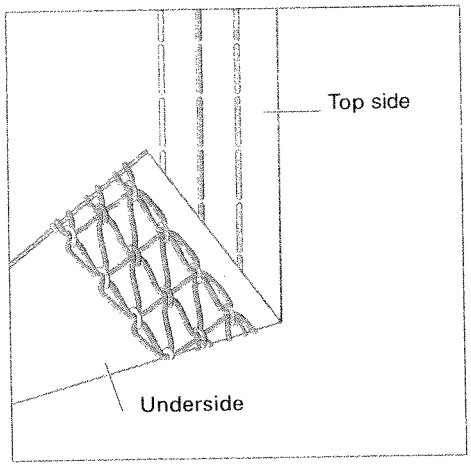

The needle threads (green, blue and pink) are too loose, causing large loops on the underside of the fabric.

Set the green, blue and pink thread tension to a higher value.

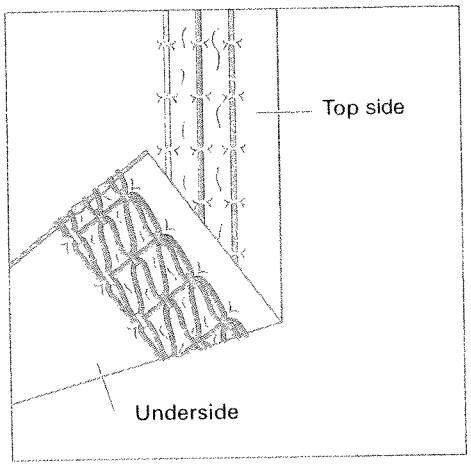

The needle threads (green, blue and pink) are set too tightly causing folds in the fabric.

Set the green, blue and pink thread tension to a lower value.

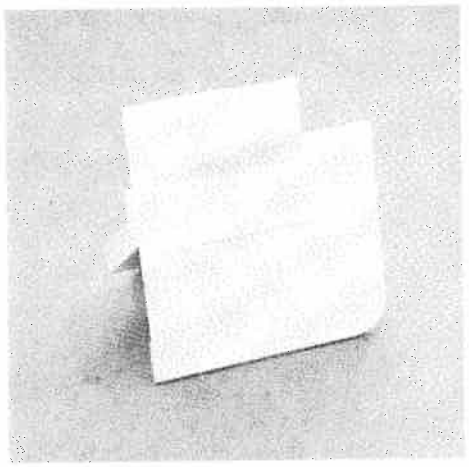

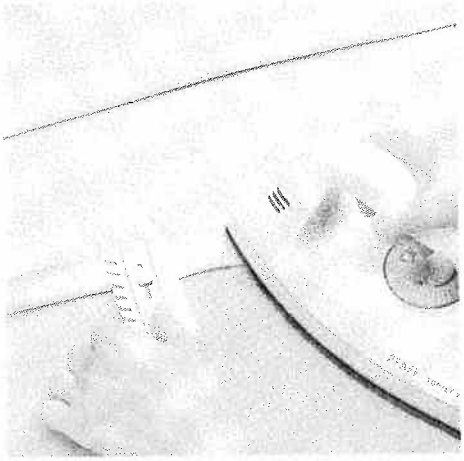

Important notes on sewing with the cover stitch

The power table is marked with various units of measurement. The upper figures are in cm. The lower figures are in inches.

Note: The hemmer guide H2 is available as a special accessory. With this special accessory you can hem your fabric effortlessly without having to press under the hem edge prior to sewing the cover stitch.

Preparing the fabric:

When not using the H2 special accessory guide, it is useful to press under the fabric edge before hemming it. The width of fabric to be pressed under must be 0.5 cm wider than the finished hem width. **Example:** Press under a one inch (2.5 cm) fabric width to sew a finished hem of 3/4 inch (2 cm).

Note: Set the seam width at 3.5 cm.

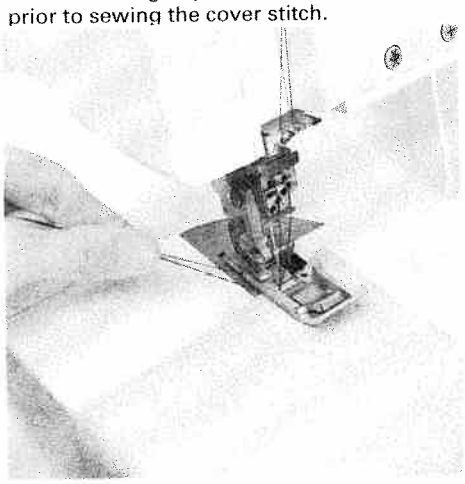

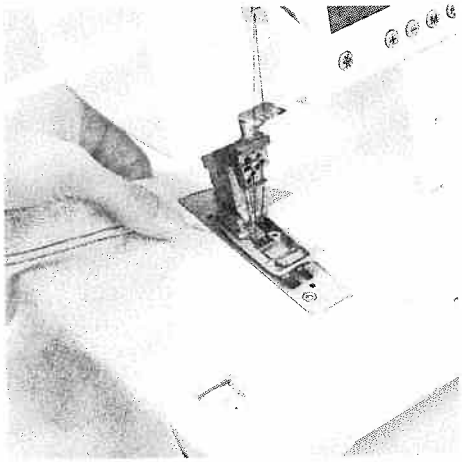

To start sewing:

Raise the presser foot and place the fabric under the presser foot so the needles pierce the fabric for the first stitch. Position the fabric at the desired width using the marked guidelines on the power table. When starting to sew, pull the fabric taut towards the rear and sew slowly. The speed may be increased as you sew further along the fabric.

Finishing sewing:

1. When sewing to the end of the fabric:

Tightly hold the threads at the end of the seam. Sew slowly off the fabric while lightly pulling the threads toward the rear of the machine.

Note: The differential feed may need to be adjusted slightly to allow your fabric to lie. perfectly smooth. Test your settings first on a piece of scrap fabric.

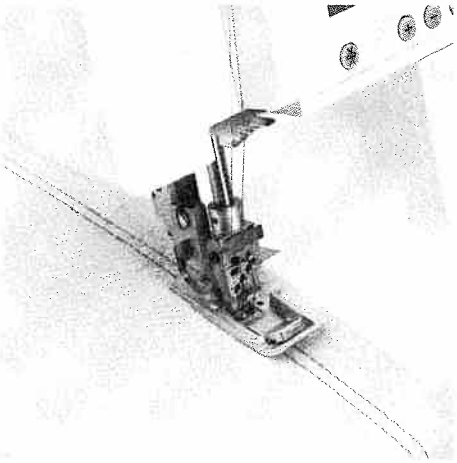

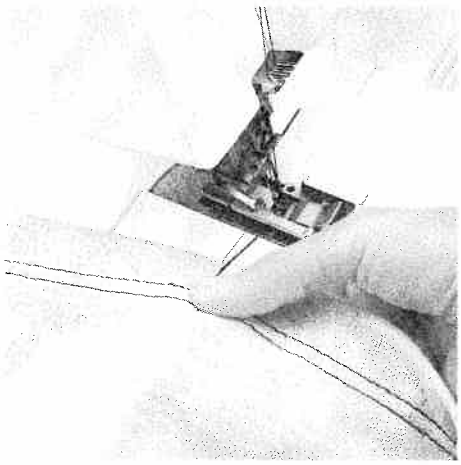

2. If not to sew to the end of the fabric, e.g. sewing tubular fabrics:

Sew 4-5 stitches on top of each other. During the last stitch, turn the hand wheel towards you until the needles pierce the fabric and you have heard each needle "click" (just before the needles are in the lowest position).

After the second "click" (if sewing a 2-needle cover stitch) or the third "click" (if sewing a 3-needle cover stitch) turn the handwheel away from you until the needles are in their highest position. Raise the presser foot. Press and hold the Tension Release Key 10. Hold the threads tightly at the end of the seam and pull the fabric from the machine. Cut the threads. Pull the threads through to the back of the fabric and knot them.

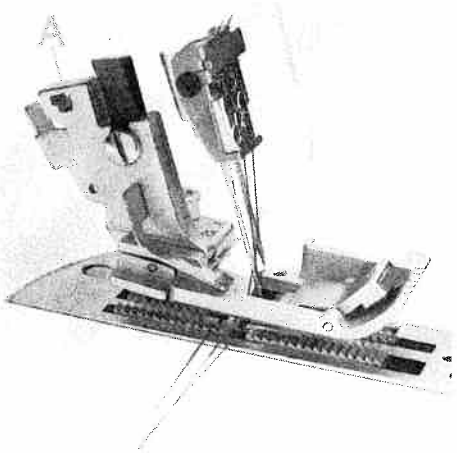

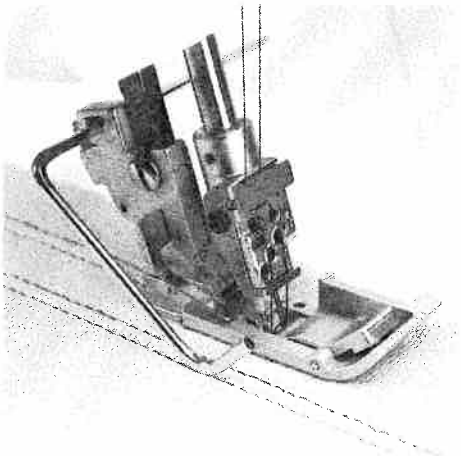

Edge guide

Push the edge guide, from the accessory box, into the guide holder **A** from the left. The edge guide can be set as required by sliding it to the left or right.

The edge guide is useful for serging seams at regular intervals with the cover stitch or two thread chainstitch.

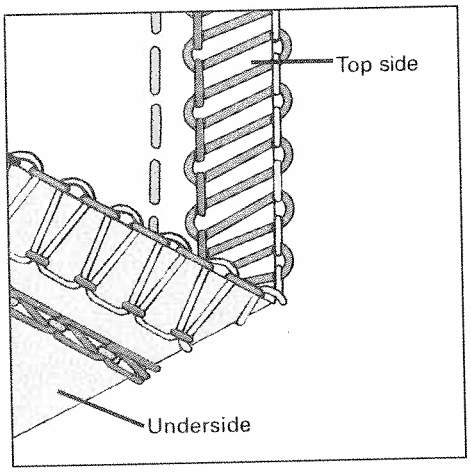

5-thread safety-stitch seam

Program 20

Since the 5-thread safety-stitch seam consists of the **2-thread chainstitch** and the **3-thread overedge seam**, you can refer to the correction possibilities of these seams below and on page 55.

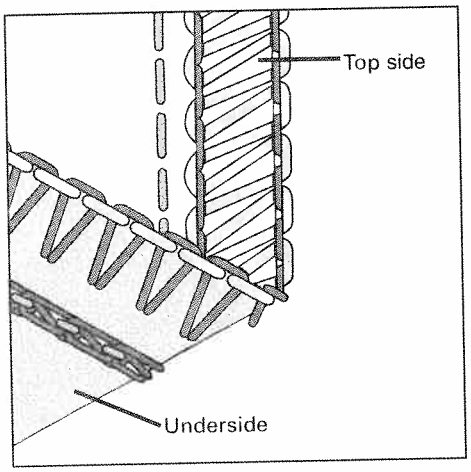

4-thread safety-stitch seam

Program 19

Since the 4-thread safety-stitch seam consists of the **2-thread chainstitch** and the **2-thread flatlock**, you can refer to the correction possibilities of these seams below and on page 57.

Note: Attach the converter (see page 33), when sewing a 4-thread safety-stitch seam.

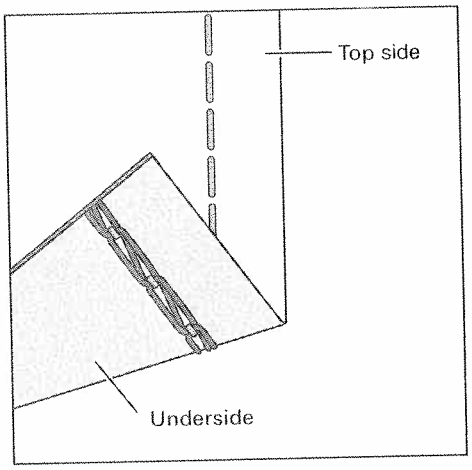

2-thread chainstitch

Program 04

When all tensions are correctly set, the needle thread (blue) is just slightly visible on the underside of the fabric.

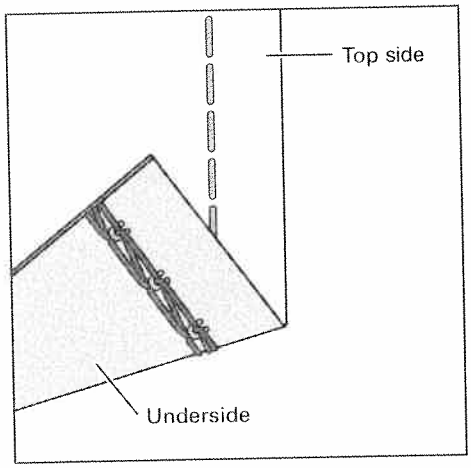

The needle thread (blue) is too loose, causing larger needle thread loops on the underside of the fabric.

Set the blue thread tension to a higher value.

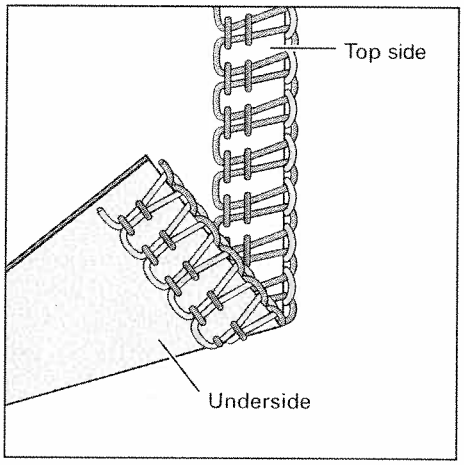

4-thread overedge seam

Program 18

When all tensions are correctly set, the loops of both looper thread (pink and yellow) are directly on the edge of the fabric.

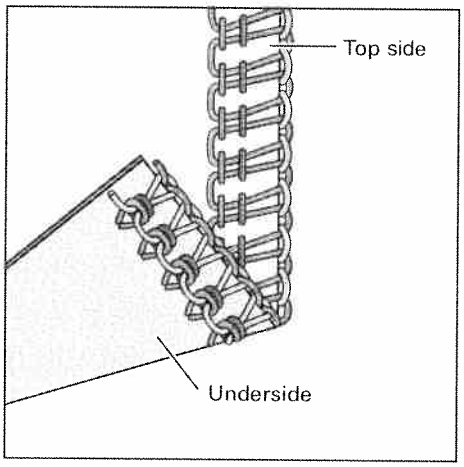

The needle threads (blue and green) are too loose, causing larger loops of needle thread on the underside of the fabric.

Set the blue and green thread tension to a higher value.

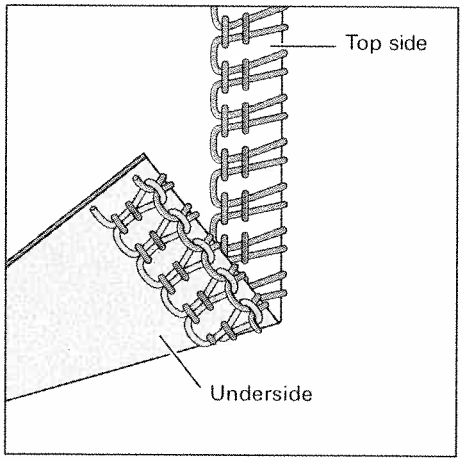

The **upper looper thread** (pink) appears on the underside of the fabric.

Set the pink thread tension to a higher value and/or the yellow thread tension to a lower value.

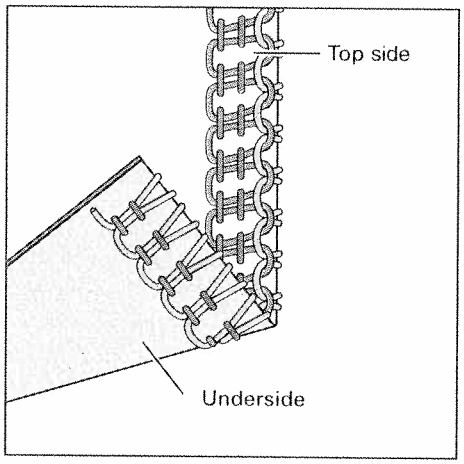

The **lower looper thread** (yellow) appears on the top side of the fabric.

Set the yellow thread tension to a higher value and/or the pink thread tension to a lower value.

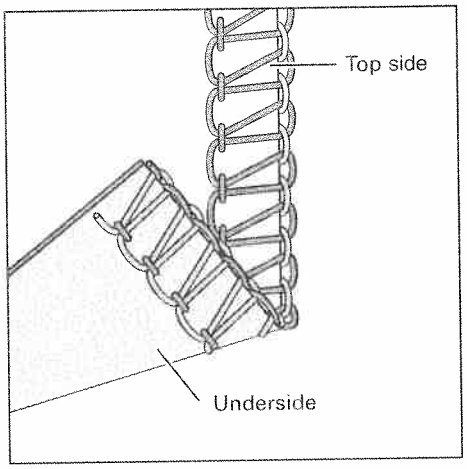

3-thread overedge seam

narrow and wide

Program 10 and 11

When all tensions are correctly set, the loops of both looper threads (pink and yellow) are directly on the edge of the fabric.

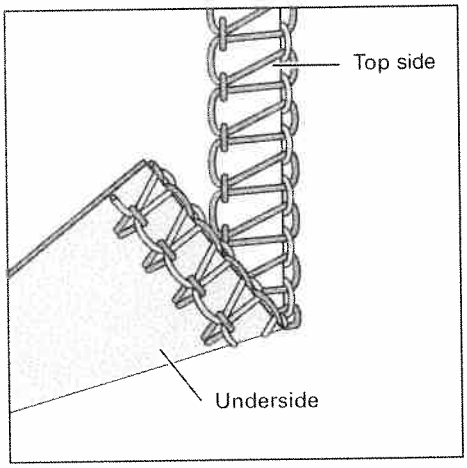

The **needle thread** is too loose, causing loops on the underside of the fabric.

Set the relevant needle thread tension to a higher value.

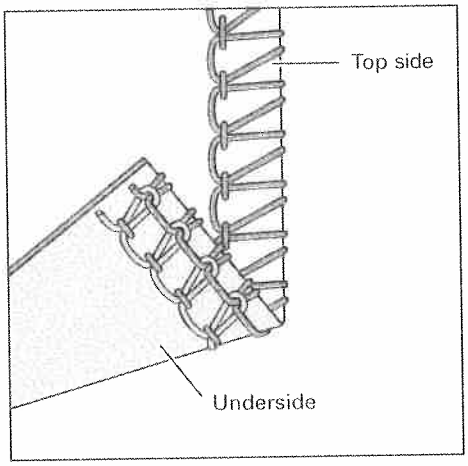

The **upper looper thread** (pink) appears on the underside of the fabric.

Set the pink thread tension to a higher value and/or the yellow thread tension to a lower value.

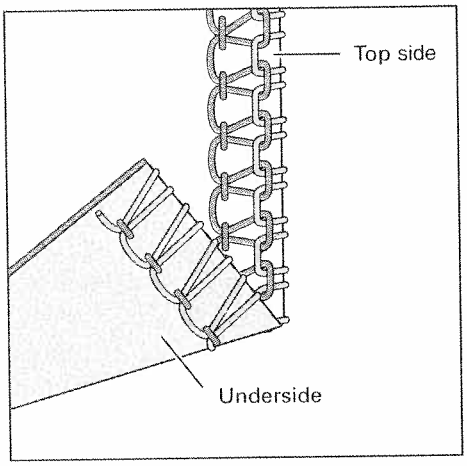

The **lower looper thread** (yellow) appears on the top side of the fabric.

Set the yellow thread tension to a higher value and/or the pink thread tension to a lower value.

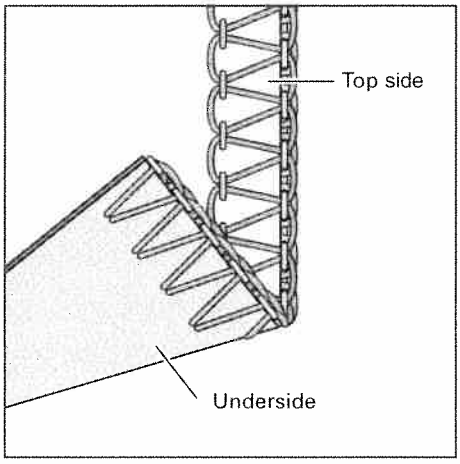

3-thread flatlock
narrow and wide
Program 13 and 14

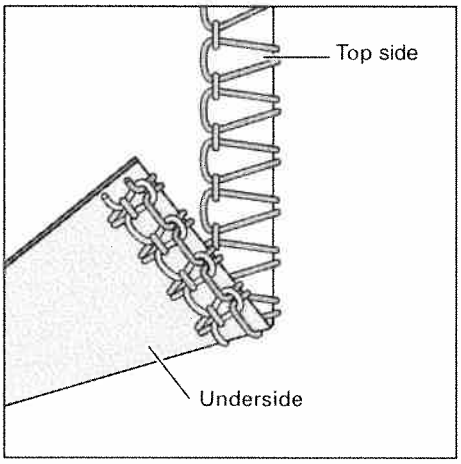

The **needle thread** is too tight.

Set the needle thread tension (blue) to a lower value.

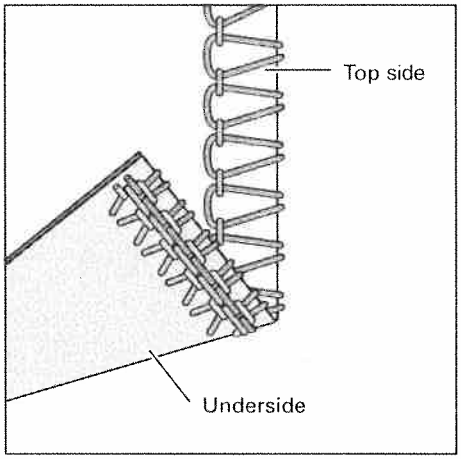

The **upper looper thread** (pink) appears on the underside of the fabric.

Set the pink thread tension to a higher value.

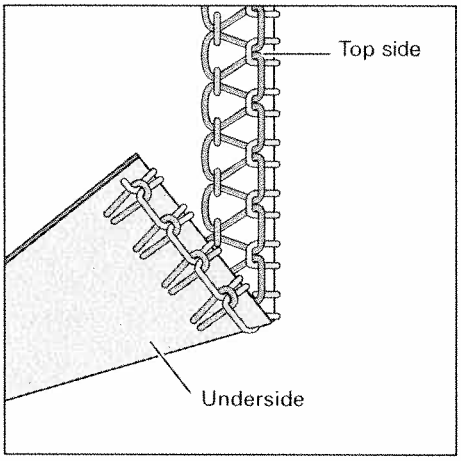

The **lower looper thread** (yellow) is too loose.

Set the yellow thread tension to a higher value.

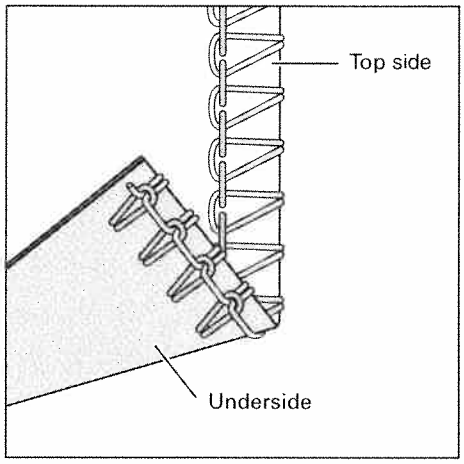

2-thread flatlock

narrow and wide

Program 05 and 06

When all tensions are correctly set, the loops of both threads are directly on the underside of the fabric.

Note: If you want to sew the 2-thread flatlock seam, then you will need to attach the converter (see page 33).

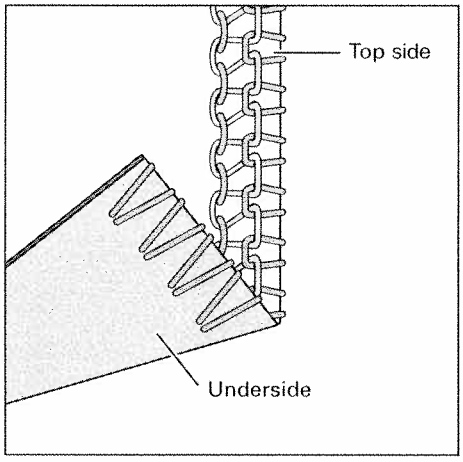

The needle thread is too loose or the lower looper thread (yellow) is too tight.

Set the relevant needle thread tension to a higher value and/or the yellow thread tension to a lower value.

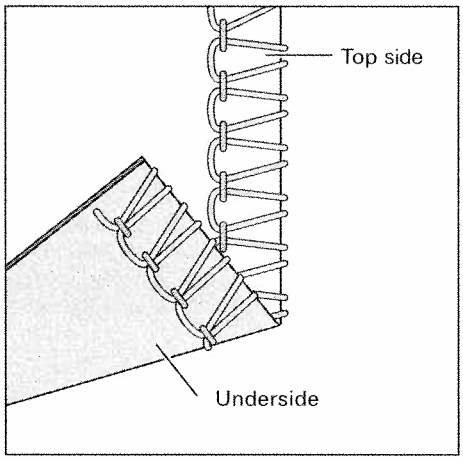

The **lower looper thread** (yellow) is too loose and/or the needle thread is too tight.

Set the yellow thread tension to a higher value and/or the relevant needle thread tension to a lower value.

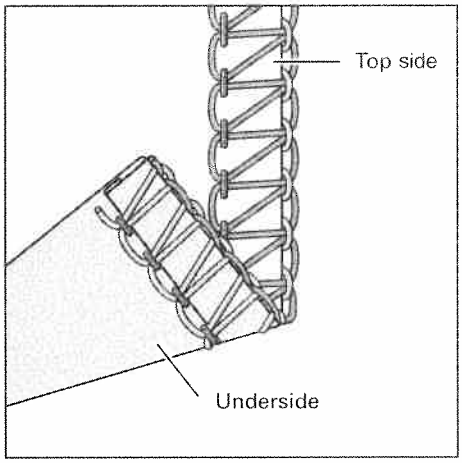

3-thread flat hem
Program 16

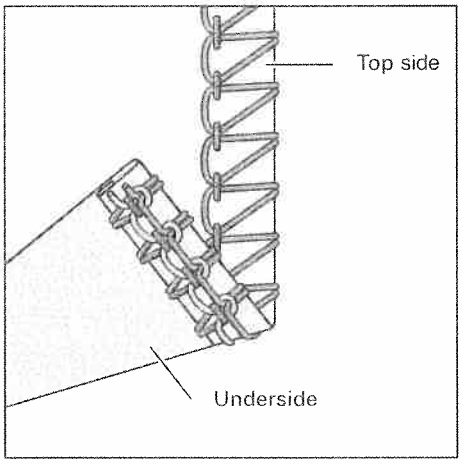

The **right needle thread** (green) is too loose.
Set the green thread tension to a higher value.

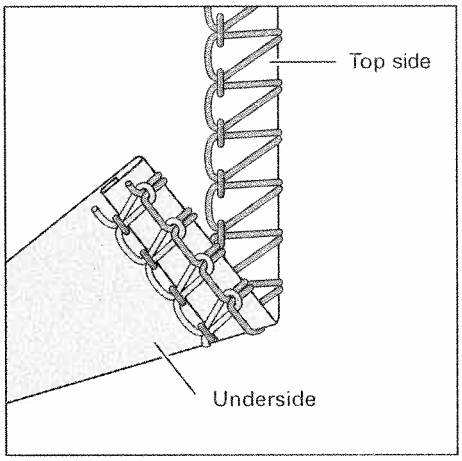

The **upper looper thread** (pink) appears on the underside of the fabric.

Set the pink thread tension to a higher value and/or the yellow thread tension to a lower value.

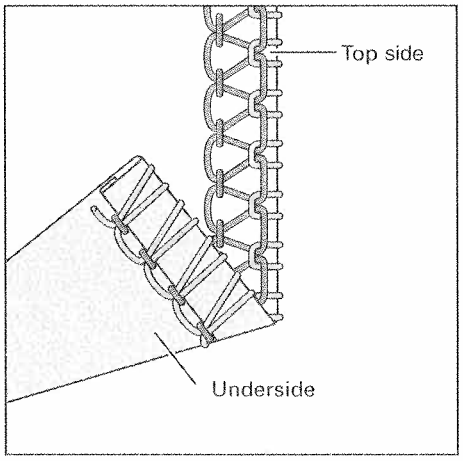

The **lower looper thread** (yellow) appears on the top side of the fabric.

Set the yellow thread tension to a higher value and/or the pink thread tension to a lower value.

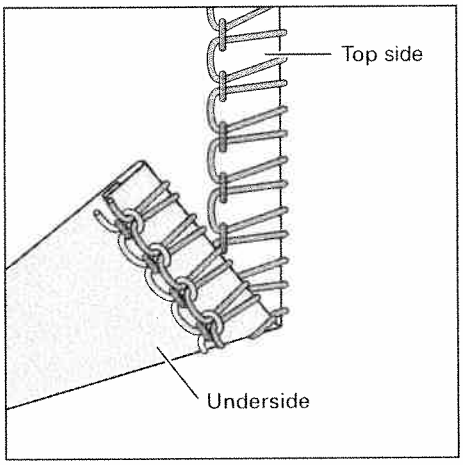

3-thread rolled hem (folded)

Program 17

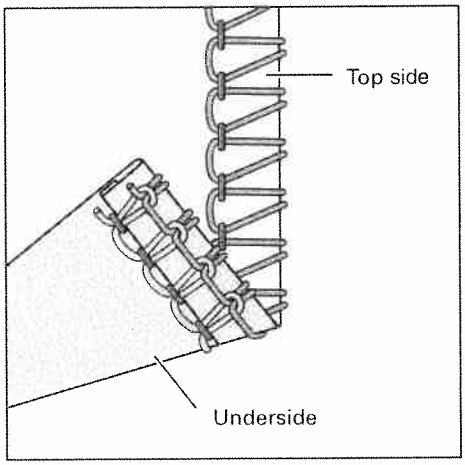

The **right needle thread** (green) is too loose.

Set the green thread tension to a higher value.

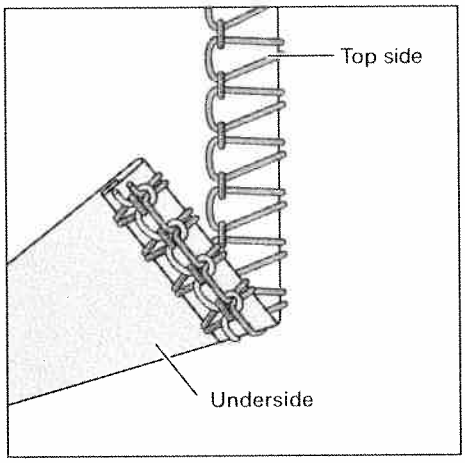

The **upper looper thread** (pink) only partly loops around the fabric edge.

Set the pink thread tension to a lower value and/or the yellow thread tension to a higher value.

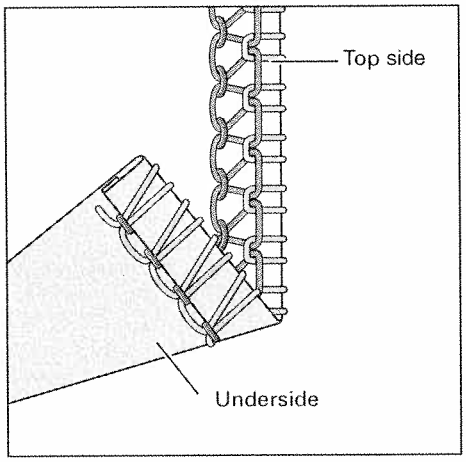

The **lower looper thread** (yellow) appears on the top side of the fabric.

Set the yellow thread tension to a higher value and/or the pink one to a lower value.

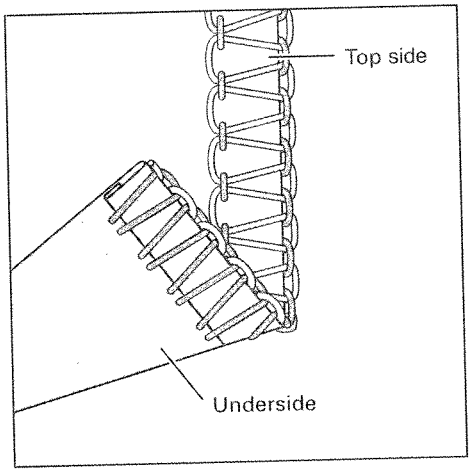

2-thread flat hem

Program 08

Note: If you want to sew the 2-thread flat hem, then you will need to attach the converter (see page 33).

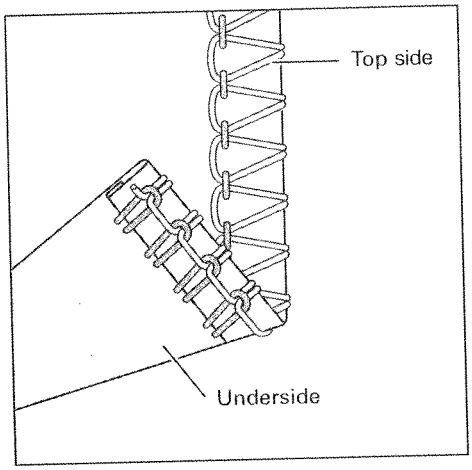

The **right needle thread** (green) is too loose.

Set the green thread tension to a higher value and/or the yellow thread tension to a lower value.

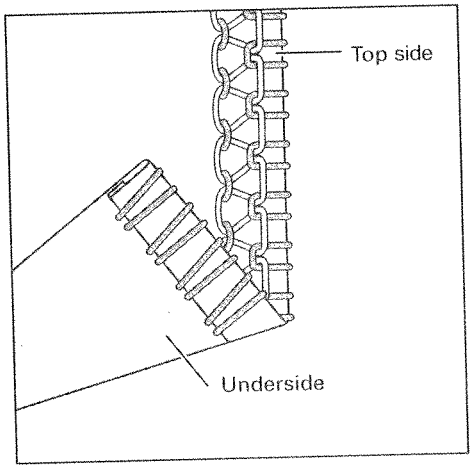

The **lower looper thread** (yellow) is too loose.

Set the yellow thread tension to a higher value.

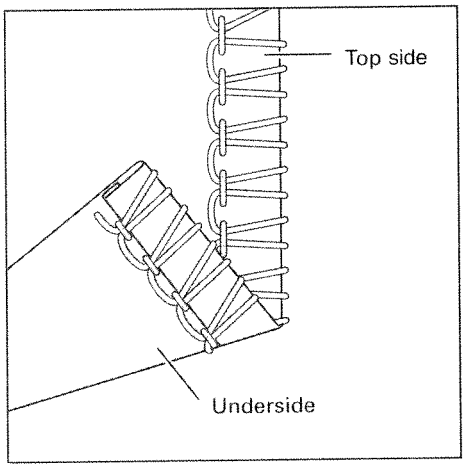

2-thread rolled hem (folded)

Program 09

Note: If you want to sew the 2-thread rolled hem, then you will need to attach the converter (see page 33).

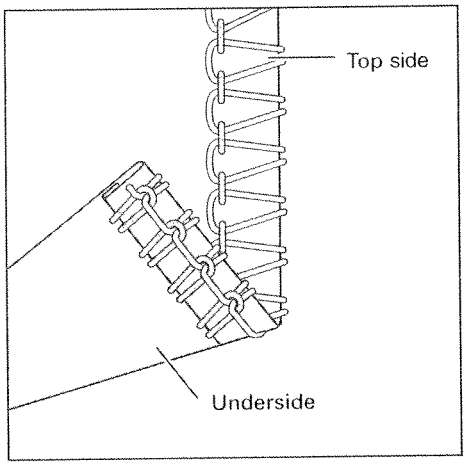

The **right needle thread** (green) is too loose.

Set the green thread tension to a higher value and/or the yellow thread tension to a lower value.

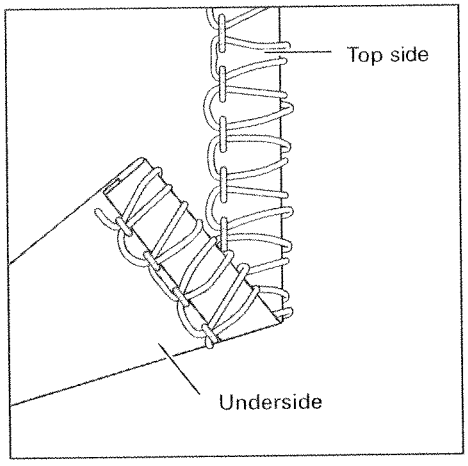

The **lower looper thread** (yellow) is too loose.

Set the yellow thread tension too a higher value.

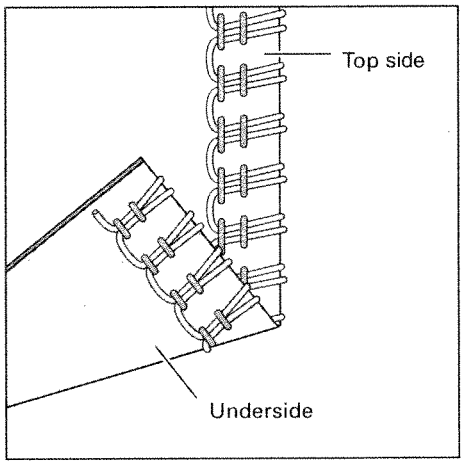

2-needle 3-thread overedge seam

Program 15

Note: If you want to sew the 2-needle 3-thread overedge seam, then you will need to attach the converter (see page 33).

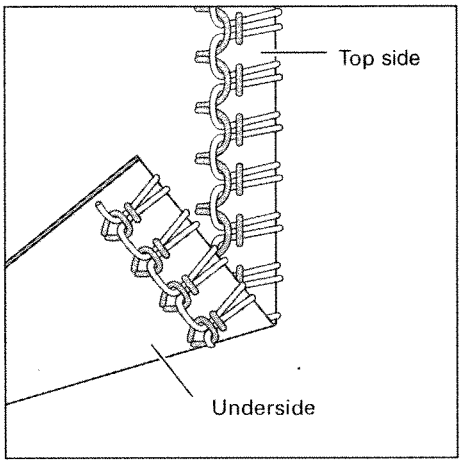

The **left needle thread** (blue) is too loose.

Set the blue thread tension to a higher value.

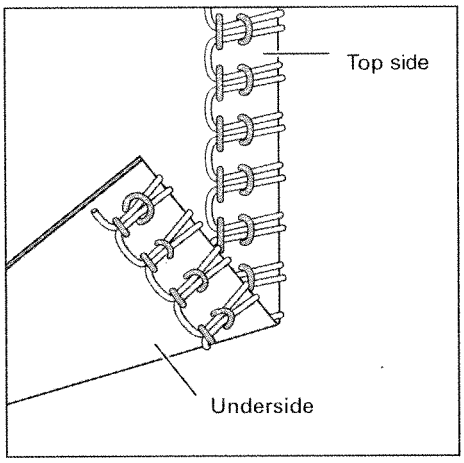

The **right needle thread** (green) is too loose.

Set the green thread tension to a higher value.

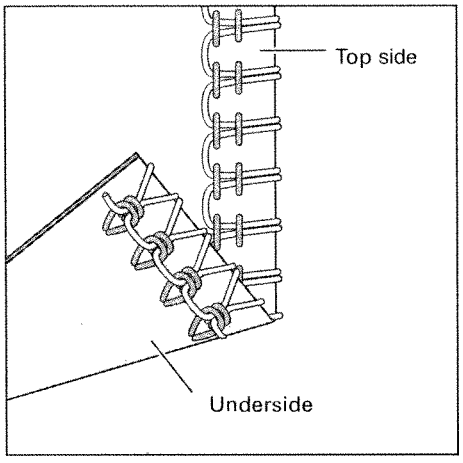

The **lower looper thread** (yellow) is too tight.

Set the yellow thread tension to a lower value.

Thread chart for 2-, 3- and 4-thread overedge seams		
Fabric	**Thread**	**Stitch length**
Light fabrics: organdy, fine knitwear, taffeta, silk, lining fabrics	Cotton no. 50 - 70 Synthetic thread no. 70 - 140	2.0 - 4.0 mm
Medium-heavy fabrics: cotton, tricot, linen, dress fabrics	Cotton no. 40 - 60 Synthetic thread no. 70 - 140	2.0 - 4.0 mm
Heavy fabrics: tweed, suit fabrics, denim, heavy cloth	Cotton no. 30 - 50 Synthetic thread no. 70 - 140	2.0 - 4.0 mm
Knitwear:	Cotton no. 40 - 60 Synthetic thread no. 70 - 140	2.0 - 4.0 mm
2 or 3-thread rolled hems	Polyester thread no. 120 - 140 Mercerized thread (bulk thread)	1.0 - 2.0 mm

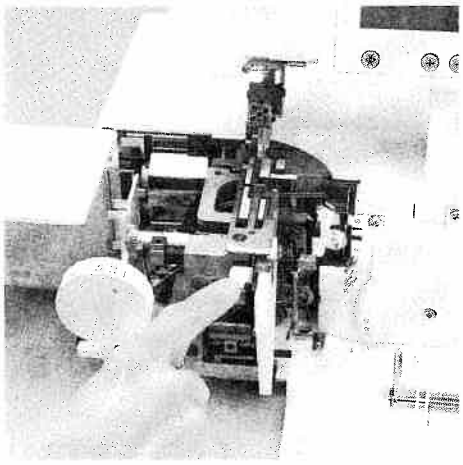

Removing the needle plate

Raise the presser foot and move the needle(s) to the highest position. Remove the presser foot and open the swivel plate. Press down the needle plate disengaging lever **33**. The needle plate **18** is raised out of its mount. The needle plate can be removed to the left.

Note:

The machine should be unthreaded when removing the needle plate.

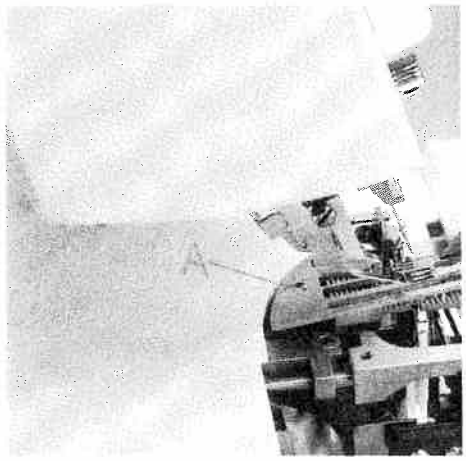

Inserting the needle plate

Place the needle plate to the rear on the guide pin (**A**) and press down at the front until you hear it click into place.

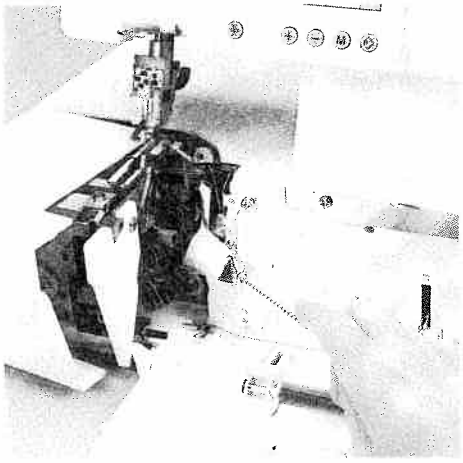

Machine maintenance

Cleaning the machine

Switch off the electrical power

Remove the trimming waste box and open the looper cover and swivel plate. Disengage the upper blade (see page 31) and remove the presser foot and the needle plate.

Use the accessory brush provided to remove any waste thread from the upper and lower blades, the differential feed and the looper area.

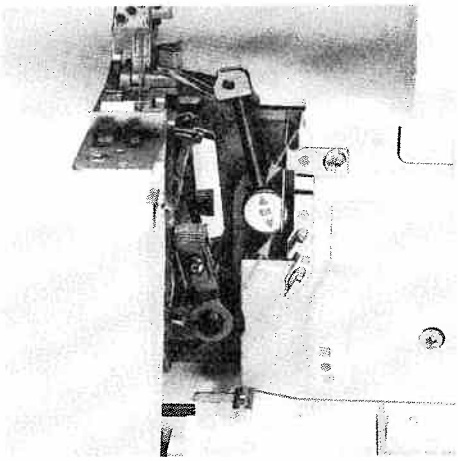

Lubricating the machine

Switch off the electrical power

Move the upper overedge looper into its highest position. Lubricate the points shown above with the oil provided (located in the accessory box) every time you clean the machine. One or two drops of PFAFF sewing machine oil are sufficient. All other parts are manufactured from special materials and do not require any lubrication.

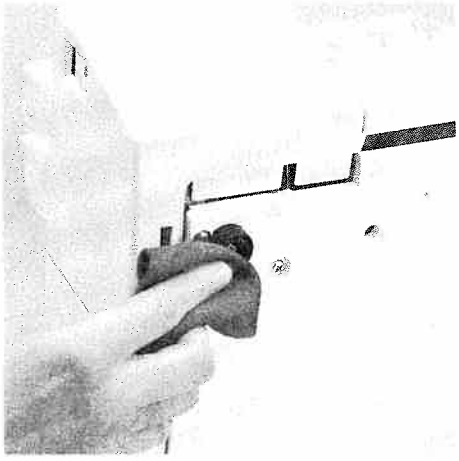

Cleaning the rubber feet

Clean the rubber feet from time to time with alcohol. This ensures good stability.

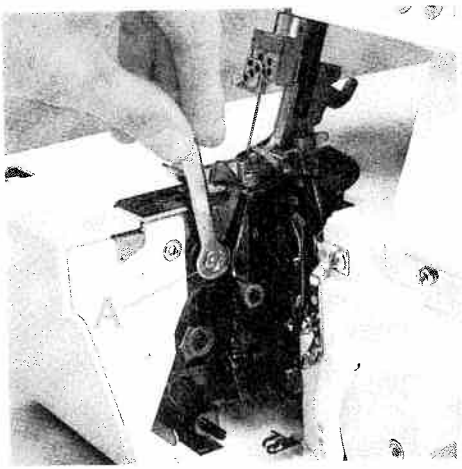

Changing the upper blade

Switch off the electrical power

To remove: Set the adjusting knob for seam width to 3.5 mm. Fasten the upper blade (see page 35) before loosening the fastening screw **A** with the wrench provided in the accessory box. Then remove the upper blade.

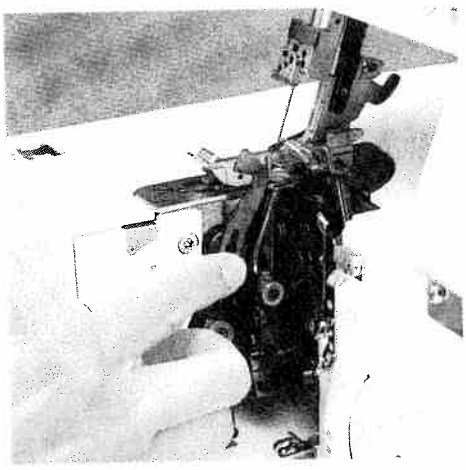

To insert: Attach the new upper blade and gently tighten the fastening screw. Then turn the handwheel until the upper blade is in the lowest position.

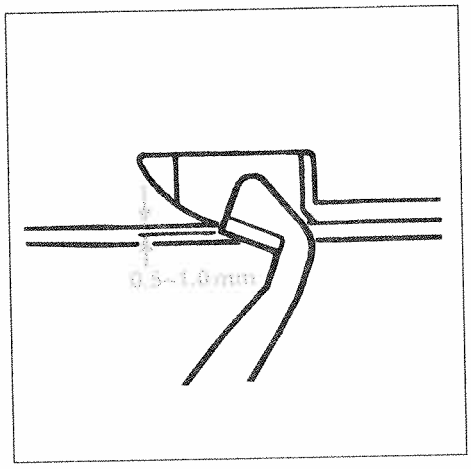

In this position the front edge of the upper blade must be **0.5** to **1.0 mm lower** than the **cutting edge** of the **lower blade**. When the upper blade has been properly inserted you can fully tighten the fastening screw. Loosen the screw to the movable upper blade.

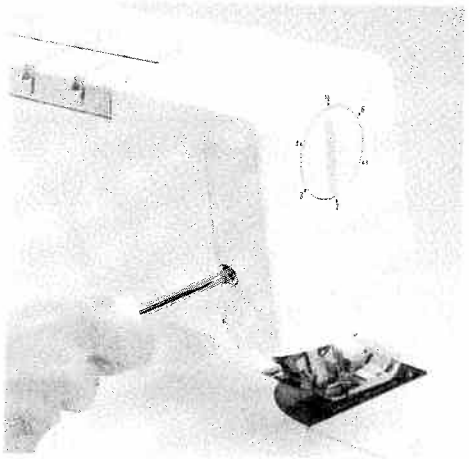

Changing the light bulb

Switch off the electrical power

Using the screw driver in the accessory box loosen the fastening screw to the sewing light cover **23** until this can be removed.

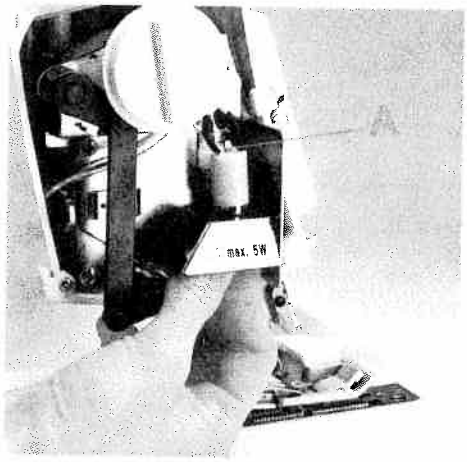

Push the light bulb fully into its socket, during which pin **A** moves upward. Rotate counterclockwise through half a turn and remove.

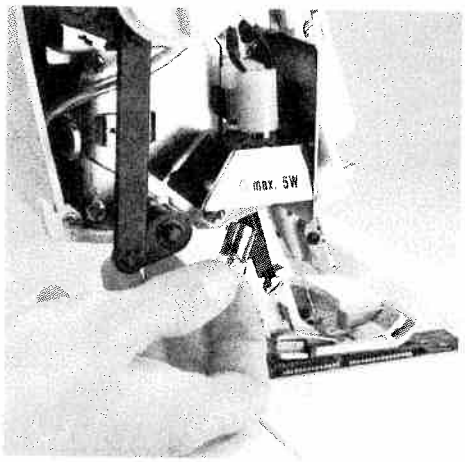

Guide the new light bulb (max. 5 W) into the socket and twist until both pins on the bulb click into place. Press the bulb right into the socket, twisting it clockwise until it is securely fixed.

Replace the sewing light cover and tighten the fastening screw.

Special Accessories

This machine offers a wide range of special accessories for special serging details. Consult your PFAFF dealer.

Special accessory	Order No.	Use
Multi-purpose foot M	29 924 993 82-002	Foot, to which guides H1, H2 and H3 can be attached
Lace and braiding guide H1	29 924 993 82-003	Guide for applying lace or braiding (to the under side of the fabric)
Hemmer guide H2	29 924 993 82-001	Guide for hemming/turns under one inch while serging
Bias-tape guide H3	29 924 993 82-004	Guide for applying bias tape as edging
Clear foot N	29 924 993 82-006	Presser foot with groove It can be used together with guide N1
Faggoting guide F2	29 924 993 82-008	Guide for joining two pieces of fabric with consistent clearance. Use transparent presser foot F from the accessory box
Lace guide F3	29 924 993 82-005	Guide for applying lace (on the upper side of the fabric). Use transparent presser foot F from the accessory box
Flat-felled-seam guide F4	29 924 993 82-009	Guide for sewing flat-felled seams Use transparent presser foot F from the accessory box
Fancy-stitch guide N1	29 924 993 82-007	For stitching down a double chainstitch or a 3-thread overedge seam and for decorative effects
Cording foot K	9 924 993 82-011	For serging cording with the cording tongue K1 and the guide K2
Cording tongue K1	29 924 993 82-012	For serging pintucks
Cording guide K2	29 924 993 010	For serging cording with gimp thread
Strap and belt-loop foot L	29 924 993 82-013	For sewing belt loops and straps, and for ornamental stitches with a cover stitch
Universal tape binder	29 924 993 82-014	For binding fabric edges with various widths of pre-made bias tape
Beading foot P	29 924 993 82-015	For serging on beading and sequins
Bead needle plate P	29 924 993 82-016	The bead needle plate P together with the beading foot P allows you to serge on beading and make a rolled hem simultaneously.

Special accessory	Order No.	Use
Multi-purpose foot C	29 924 993 82-017	For sewing on bands, elastic tape, elastic thread and fishing line together with the various elastic tape inserts
Elastic tape insert 7.5 mm	29 924 993 82-034	For sewing on elastic tape with a width up to 7.5 mm
Elastic tape insert 10 mm	29 924 993 82-035	For sewing on elastic tape with a width from 7.5 mm - 10 mm
Elastic tape insert 13 mm	29 924 993 82-036	For sewing on elastic tape with a width from 10 mm - 13 mm
Shirring/Gathering foot G	29 924 993 82-018	For shirring/gathering and joining two pieces of fabric simultaneously
Blindstitch foot D	29 924 993 82-019	For serging blind hems and ornamental seams
Band and braiding foot Q	29 924 993 82-020	For sewing on bands and braiding. Gimp cords and thread and bands with decorative threads can be stitched over using this foot together with guide K2
Accessory holder	29 924 993 82-021	Holder, to which the following accessories together with the retaining screw and the swiveling arm can be attached.
Retaining screw	29 924 993 82-023	For securing the following accessories to the accessory holder
Edge guide with units of measurement	29 924 993 82-022	For guiding the fabric edge and measuring cut widths and seam widths simultaneously (use the machine's standard presser foot)
Gathering/ Shirring tongue	29 924 993 82-027	For gathering/shirring and joining two pieces of fabric simultaneously (use the machine's standard presser foot).
Tape binder 40 mm	29 924 993 82-031	For binding the fabric edge with 40 mm tape. Binding width 10 - 12 mm. (Use the machine's standard presser foot.)
Swiveling arm	29 924 993 82-024	For attaching the following accessories to the accessory holder
Curved-seam guide	29 924 993 82-025	For serging a curved piece to a straight piece of fabric (use the machine's standard presser foot).
Piping and welting foot E	29 924 993 82-028	Presser foot for guiding and sewing in piping and welting
Piping and welting accessory	29 924 993 82-030	Together with piping foot E, for binding and guiding piping and gimp between two layers of fabric

Sewing problems and their solutions

This machine has been developed with ease of operation in mind. No difficult or tricky settings need to be made. Sewing problems of the kind described below may occur as a result of minor adjustment and operating errors. They can be easily adjusted by following the instructions.

Problem	Cause	Solution
Needle breakage	The needle was bent or the point damaged.	Insert new needle . (see page 13)
	The needle was not fully inserted.	Insert needle fully (see page 13).
	The fabric was pulled too firmly.	Do not pull on the fabric when sewing.
Thread breaks	Incorrectly threaded.	Thread properly (see page 14 - 23).
	Thread has caught.	Check if the thread is caught on the spool stand etc
	Thread tension is too tight.	Correct the tension (see page 49 – 62).
	Needle not fully inserted.	Insert needle correctly (see page 13).
	Incorrect needle used.	Use needle system EL X 705.
Skipping stitches	Needle bent or point damaged.	Insert new needle (see page 13).
	Needle not fully inserted.	Insert needle correctly (see page 13).
	Incorrect needle used.	Use needle system EL X 705.
	Incorrectly threaded.	Thread correctly (see page 14 - 23).
Stitch formation faulty	Incorrect setting of thread tensions	Re-set thread tensions (see page 49 – 62).
3 or 4 thread overedge seam has an irregular appearance and the upper looper thread has not interlocked in the seam.	The converter is attached.	The converter must be removed (see page 33).

Problem	Cause	Solution
Machine will not operate although master switch is on.	Power supply interrupted	Close looper cover (see page 8)
Fabric not neatly trimmed	Waste thread between upper and lower blade	Clean blades.
	Upper blade is blunt.	Replace upper blade (see page 66).
Puckered seams	Thread tension too tight.	Reduce thread tension
	Incorrect setting of differential feed.	Re-adjust differential feed (see pages 38, 39)
	Thread has caught due to incorrect threading.	Thread correctly (see pages 14 - 23).
Fabric not fed through evenly	Stitches too short	Increase stitch length see page 35)
	Sewing foot pressure too low for heavy fabrics.	Increase sewing foot pressure (see page 29).
	Sewing foot pressure too high for lightweight fabrics.	Reduce sewing foot pressure (see page 29).

Specifications

Maximum sewing speed	1500 stitches/min.
Seam width	1.4 mm - 9.0 mm
Cover stitch width	2.5 mm, 5 mm
Stitch length	0.5 mm - 4 mm
Presser foot	exchangeable
Lubrication	manual
Presser foot height	4.5 mm
Overedge stroke	2.0 mm
Needle system	EL X 705, cat no. 2002
Needle size	80/12, 90/14
Number of threads	2, 3, 4, 5
Dimensions (width x height x depth)	355 x 290 x 300 mm
Weight	10 kg

Packing contents

1 machine
1 foot control
1 instruction manual/guarantee card
1 waste container
1 machine cover
1 accessory box
1 power table

Parts of the coverlock 4872

38 Thread guides with color coding
39 Telescoping thread guide
40 Thread chain cutter
41 Thread spool stand
42 Thread spool pin
43 Cone thread adapter
44 Spool disc
45 Machine socket, power cord
46 Electrical power master switch
47 Machine socket, foot control
48 Handwheel
49 Regulator wheel for differential feed
50 Stitch length adjustment knob
51 Presser foot lifter
52 Rear thread guides

53 Waste container
54 Foot control
55 Power cord
56 Accessory box
57 Power table

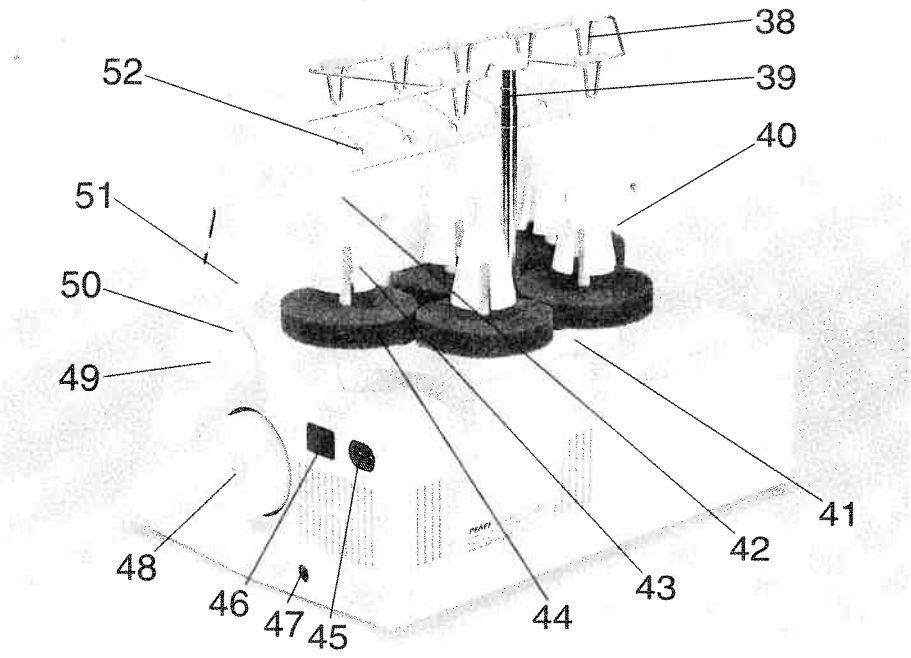
38
52
39
40
51
50
49
41
42
48
43
46
47
45
44

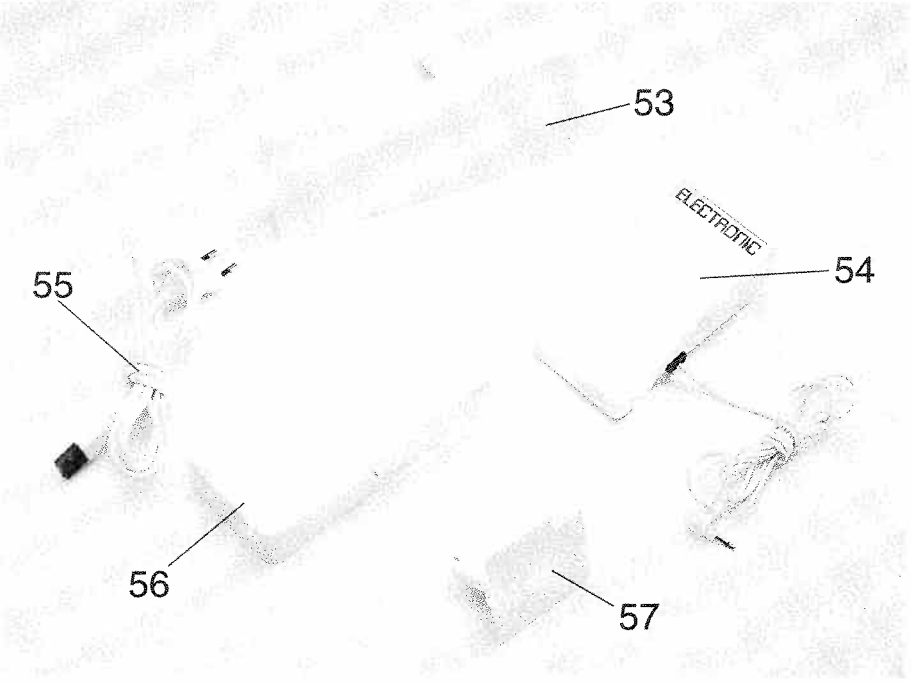
53
ELECTRONIC
54
55
56
57

G. M. Pfaff
Aktiengesellschaft
Werk Karlsruhe-Durlach
Gritznerstraße 11
76227 Karlsruhe

Printed in Germany.
Druckerei Gablenz GmbH
76356 Weingarten, Stettiner Strasse 17

Information subject to change without notice.

No.: 29-629 989-54/000
Englisch • 11/98