SINGER

15k 66k 201k 99k 185k 327k 328k 329k 404k

A Manual of Family Sewing Machines

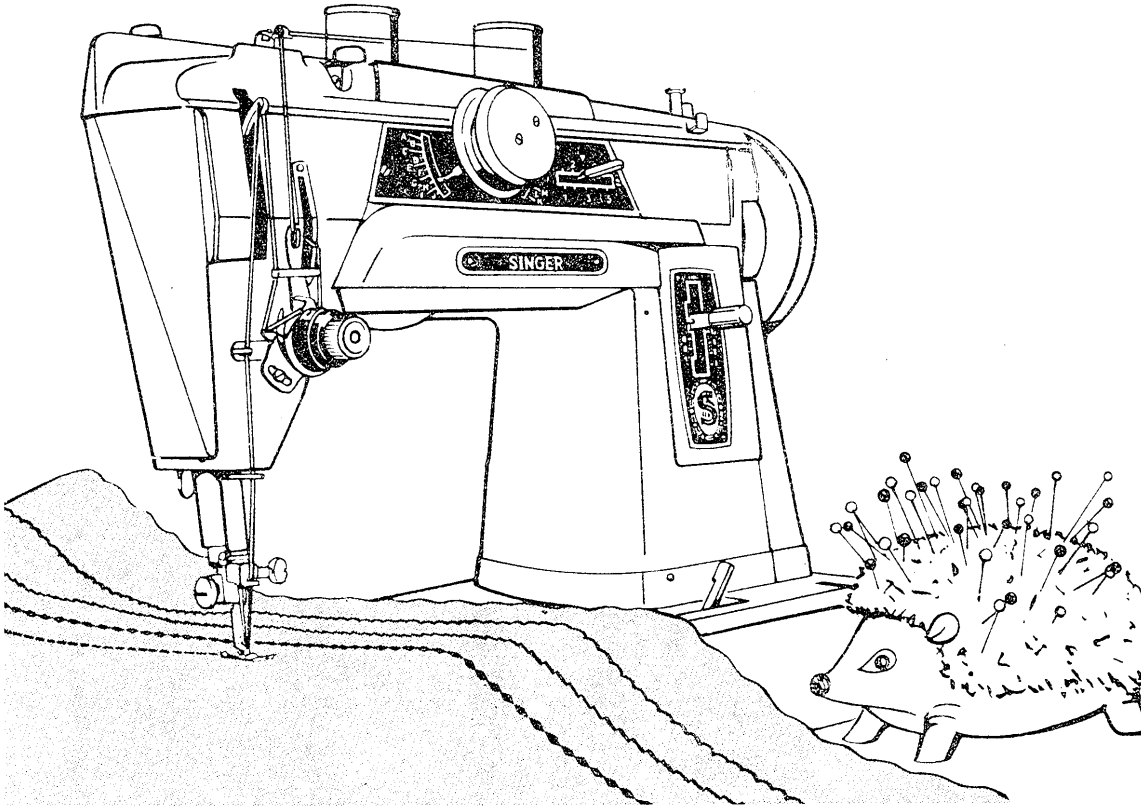

PREFACE

THE great aim in education is to equip the scholar for his or her future career. To the girl interested in household economics the Sewing Machine offers wonderful possibilities. The job of this booklet is to instruct her in the care and use of the family Sewing Machine so that she can use it to the best advantage.

A large part of the family income is usually spent by the woman, and her ability to plan and make smart, attractive clothes for herself and for her family as well as being able to furnish her home with curtains, chair covers and all kinds of beautiful accessories, will provide her with great satisfaction and pleasure.

Successful home sewing is in the reach of anyone making the fullest possible use of the modern Sewing Machine and its various attachments. Garments can be made with a professional finish for about half the cost of a similar ready-made garment. There are many excellent paper patterns available featuring up-to-date styles for every age, some are specially designed for the beginner and others fulfil the requirements of the more experienced home dressmaker. Glossy magazines print a steady flow of ideas for making the home beautiful, many of which are suitable for machine sewing.

With the introduction of the Slant-O-Matic, Zig-Zag Stitch and Automatic Embroidery, a whole new vista of sewing skills emerge. It is not surprising, therefore, that the woman of today is becoming interested in home sewing.

The modern electric sewing machine makes needlework a pleasure and by using the attachments supplied, fascinating trimmings can be achieved in a fraction of the time previously required.

The instruction contained in this booklet shows you how to use your sewing machine and to take proper care of it, so that you may obtain the greatest benefit.

GENERAL INSTRUCTIONS FOR THE CARE AND OPERATION OF FAMILY SEWING MACHINES

●

The Principal Parts of Lock Stitch Sewing Machines and Their Uses.

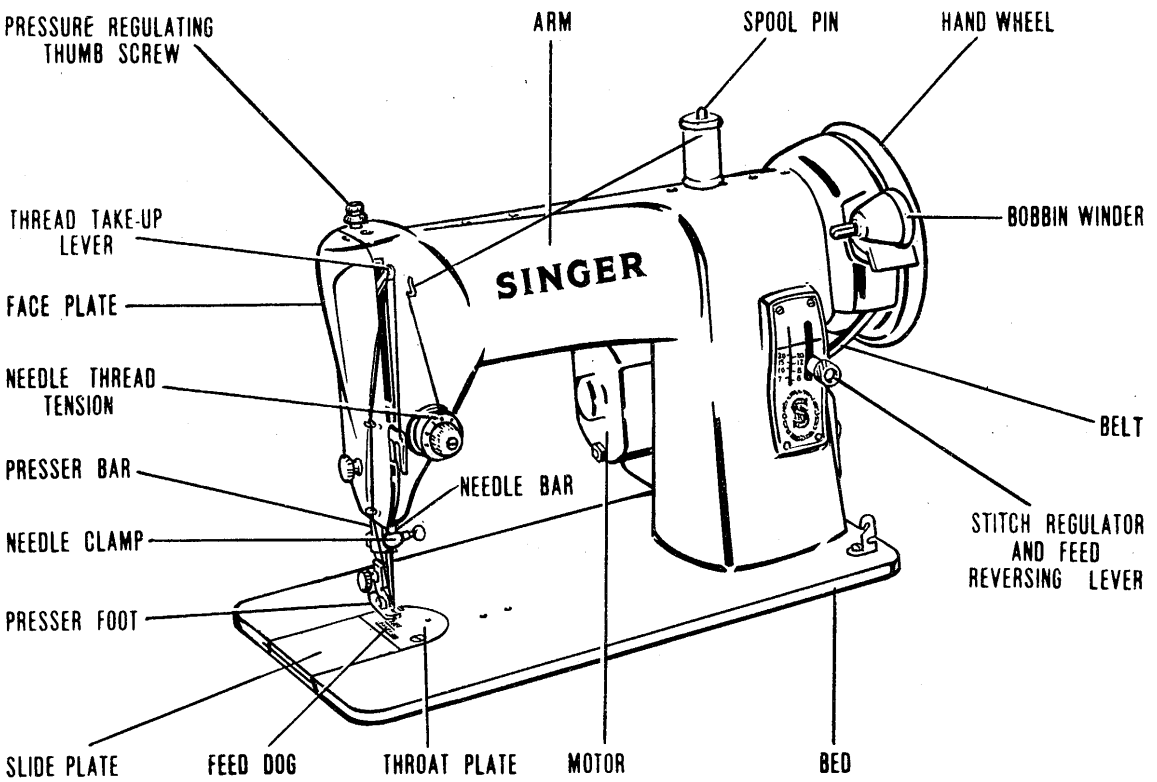

FIG. 1. PRINCIPAL PARTS OF THE HEAD.

Head—the part above the table (Fig. 1) containing the stitching mechanism.

Arm—the curved part of the head containing the mechanism for driving the needle and handling the upper thread.

Bed—the flat portion of the head, under which is mounted the feeding mechanism and that for controlling the lower thread.

Hand Wheel—the wheel at the right of the head driven by the **belt.**

Bobbin Winder—the mechanism for automatically winding bobbins.

Stitch Regulator—the device which controls the length of the stitch.

Upper Tension—the means for controlling the delivery of the upper thread from the spool.

Thread Take-up Lever—the part which pulls up the slack thread and locks the stitch.

Needle Bar—the vertical bar in the lower end of which the needle is inserted.

Presser Bar—the vertical bar to which the **presser foot** is attached.

Face Plate—the vertical plate on the left of the arm, which may be removed to give access to the needle bar, presser bar and take-up.

Throat Plate—the plate in the bed directly below the presser foot through which the needle passes and the feed dog moves.

Feed Dog—the toothed part which projects upward through slots in the throat plate, carrying the fabric from the operator at each stitch. The movement of the feed dog is controlled by the stitch regulator which determines the desired length of stitch.

Bed Slide—the flat plate or plates at the left of the bed, which may be opened to give access to the shuttle or bobbin case and other parts of the lower stitch-forming mechanism.

Bobbin—the spool on which thread is wound to furnish the lower or shuttle thread supply.

Shuttle or Bobbin Case—the container in which the bobbin is placed and around which the loop of the needle thread is passed in forming the lock stitch.

Rotary or Oscillating Hook—the part which enters the loop of needle thread and carries it around the bobbin case. In the long-bobbin machine (Singer No. 128) this function is performed by the shuttle, which also acts as a bobbin case.

Lower Tension—the spring on the shuttle or bobbin case, which controls the tension on the thread from the bobbin.

Cabinet Work—all the wood parts.

Stand—the supports and driving parts on which the cabinet work is mounted.

Treadle—the platform rocked up and down with the feet to operate the machine.

Pitman—the rod connecting the treadle and the band wheel.

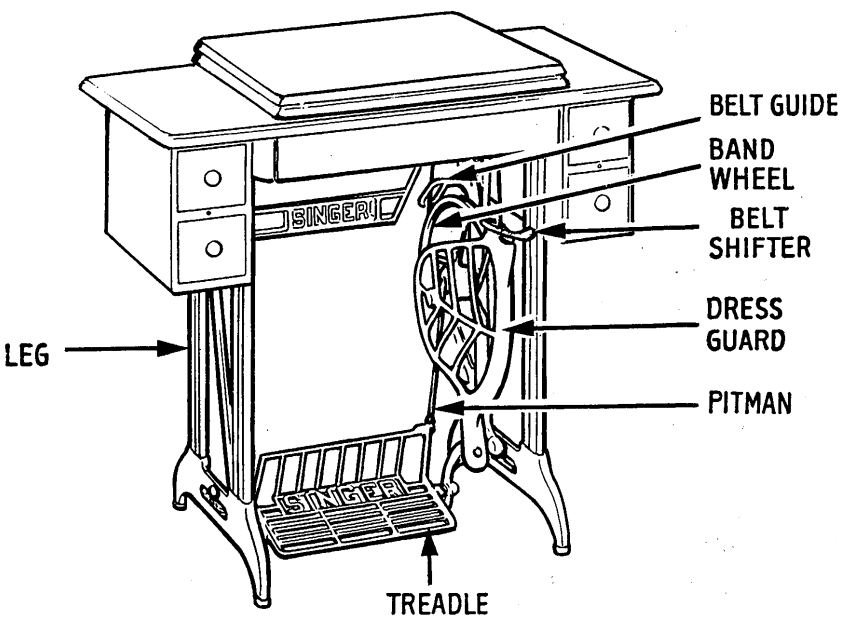

FIG. 2. PRINCIPAL PARTS OF THE CABINET TABLE STAND.

Band Wheel—the large wheel with a groove in which the belt runs, mounted on the **band wheel crank** and rotated by the up and down motion of the pitman.

Belt Shifter—the lever at the front of the band wheel, which may be turned to the left to throw the belt off the wheel. The belt may be replaced automatically by treadling, this action being accomplished by a projection on the side of the band wheel, assisted by the **belt guide** in the rear.

Legs—the upright members which support the table.

Dress Guard—the shield in front of the band wheel protecting the operator's clothing.

Formation of the Lock Stitch.

The lock stitch made by sewing machines consists of an upper or needle thread and an under or bobbin thread locked together in the material which is being stitched, the lock being formed by passing the upper around the lower thread and tightening them together in the middle of the fabric.

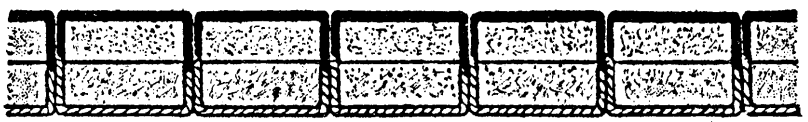

FIG. 3.

When a stitch has been completed and before each succeeding stitch is commenced, the fabric being stitched is carried from the needle by the feeding mechanism, and upon the length of its movement depends the length of the stitch.

The presser foot rests upon the fabric, prevents it from rising with the needle and holds it in contact with the feed dog while the feeding takes place. The section of the foot which presses on the cloth is slotted so that the view of the stitching may not be obstructed.

PRACTICE for BEGINNERS

The beginner should acquire a knowledge of the various parts of the sewing machine and the purpose of each, in order to give the machine proper care and to obtain the best results from it. It is essential that practice precede actual sewing on the machine. For this practice the upper thread and bobbin should be removed from the machine and the presser foot raised. The operator should be equipped with a chair high enough to allow her to sit comfortably and squarely in front of the machine directly in line with the needle.

Whether the machine is electric or treadle controlled it is essential that the operator should continue practising until she is able to start smoothly and have an easy control at varying speeds.

Electric Machine. See that the foot control is placed in such a position on the floor that the foot can rest comfortably on it. Press lightly on the control knob with the toe to test the amount of pressure needed for varying speeds before threading up and starting to sew.

Treadle Machine. The operator should sit squarely in front of the machine with the feet placed comfortably on the treadle. The right foot should be placed forward and the left backward so that the pressure on the treadle is with the ball of the foot.

Practice for Beginners—(Continued)

The hand wheel should receive a start with the right hand at the same time as pressure is applied to the treadle. In the case of family sewing machines of the lock-stitch type, the hand wheel should turn from the top towards the operator.

This practice should be continued until an easy method of treadling is acquired and the operator is able to start the machine and keep it running smoothly.

Note. During this practice and whenever a sewing machine is run without sewing, the needle should be unthreaded and the presser foot raised so that it is not in contact with the feed.

Practise Straight Stitching with Paper.

It is well to practise straight stitching with paper and without thread until the operator can follow a line with ease before actually sewing, as crooked

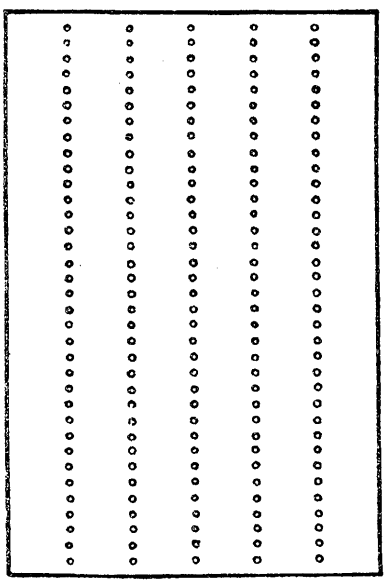

FIG. 4. SAMPLES OF STITCHING.

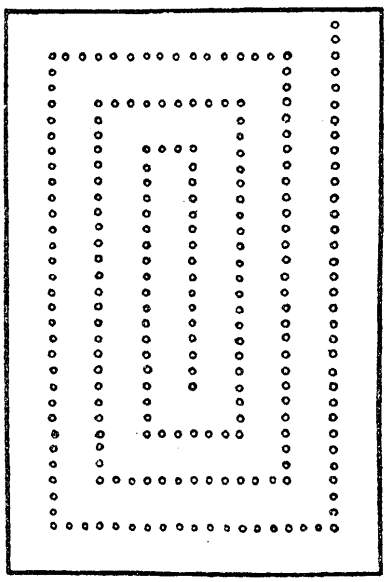

FIG. 5. PRACTICE ON PAPER.

stitching will ruin a garment. Provide a few sheets of pad paper measuring about six by nine inches, and with a pencil and ruler draw lines thereon lengthwise about a quarter of an inch apart. Practise following these lines with stitching until perfect results are obtained. See Fig. 4.

The next practice should be with a sheet of paper of the same size. Begin by stitching along one edge, keeping the edge of the paper even with the right-hand edge of the presser foot. When near the corner, stop the machine with the needle in the paper, raise the presser bar and turn the paper ready to stitch along the next side; continue along the two remaining sides of the paper and then use the first line of stitching as a guide, making a similar pattern to that shown in Fig. 5. This gives practice in turning corners, as well as in making a straight line of stitching by using the edge of the presser foot as a guide. A medium length of stitch should be used for this practice.

By following these suggestions the beginner will acquire a sufficient knowledge of speed and control of the machine to enable her to proceed with actual stitching.

Know the Model Number of Your Machine.

To make full use of the instruction contained in this book, it will be to your advantage to know the model number of the Sewing Machine you are using. On all except the oldest Singer Machines, the model number will be found printed on a small plate near the Singer trademark to the right hand side of the machine head.

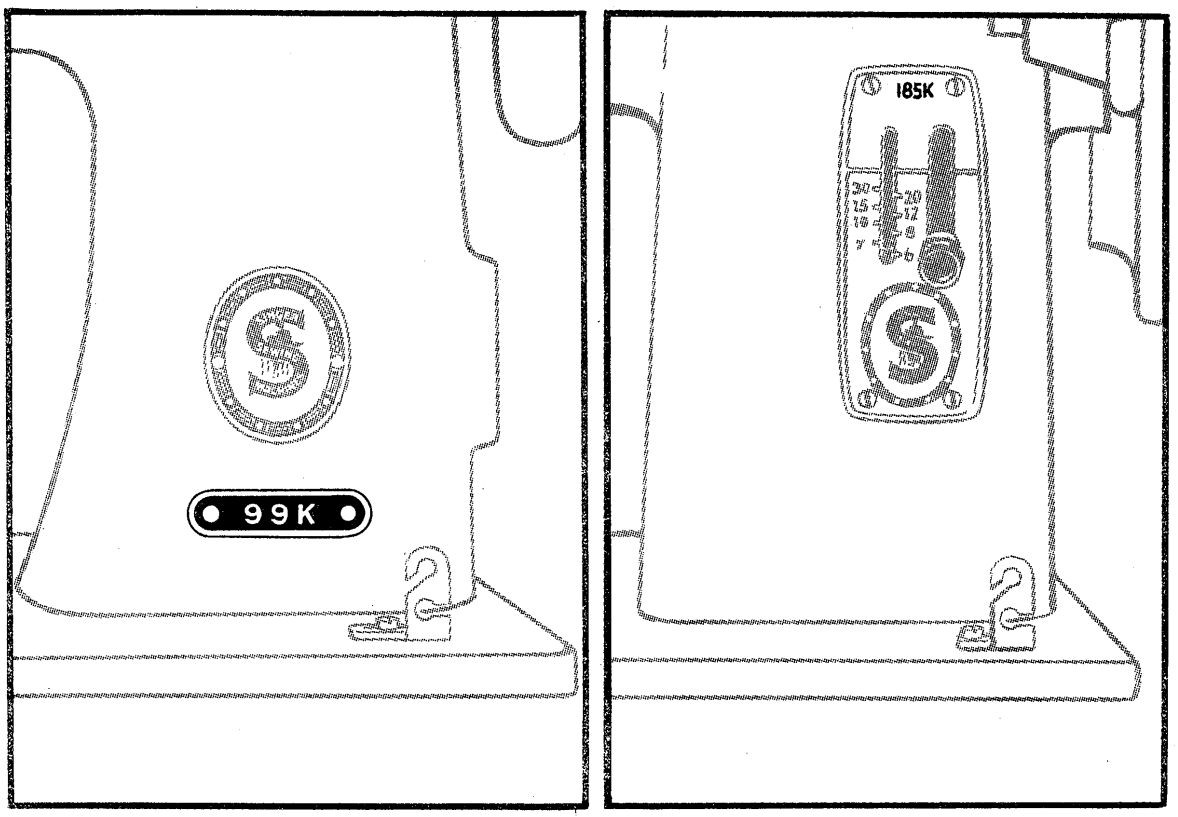

FIG. 6. MACHINE MODEL NUMBERS.

PREPARING THE MACHINE FOR SEWING

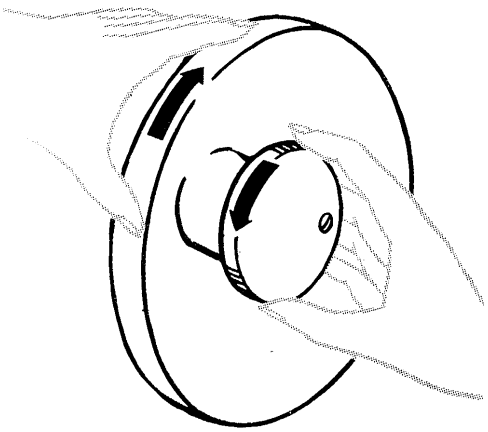

FIG. 7. RELEASING THE STOP MOTION.

Adjusting the Stop Motion Screw for Winding Bobbins.

In preparing to sew with the machine, first see that the bobbin is wound with thread of suitable size for the material to be sewn (see page 11).

It is necessary to understand the stop motion of the machine by which the hand wheel can be released when winding bobbins, thus permitting the winder to operate without running the stitching mechanism. To release the stop motion, hold the hand wheel and turn the stop motion screw over towards you, as shown in Fig. 7.

To Wind the Bobbin—Machines 15K80, 15K110 and 201K.

- Loosen stop motion screw.
- Place empty bobbin on spindle.
- Place spool of thread on spool pin.
- Thread machine as shown in Fig. 8.
- Hold end of thread and start machine.
- Break off end of thread after a few coils have been wound on bobbin and restart machine until bobbin is filled when winder will stop automatically.

To Increase Pressure of Rubber Ring against hand wheel—

- Press down winder until latch (4) drops down and holds it. Then loosen screw (5).
- Push back upper end of slotted plate (see inset, Fig. 8) as far as it will go and at same time press winder against hand wheel.
- Tighten screw (5).
- Raise latch to release winder.

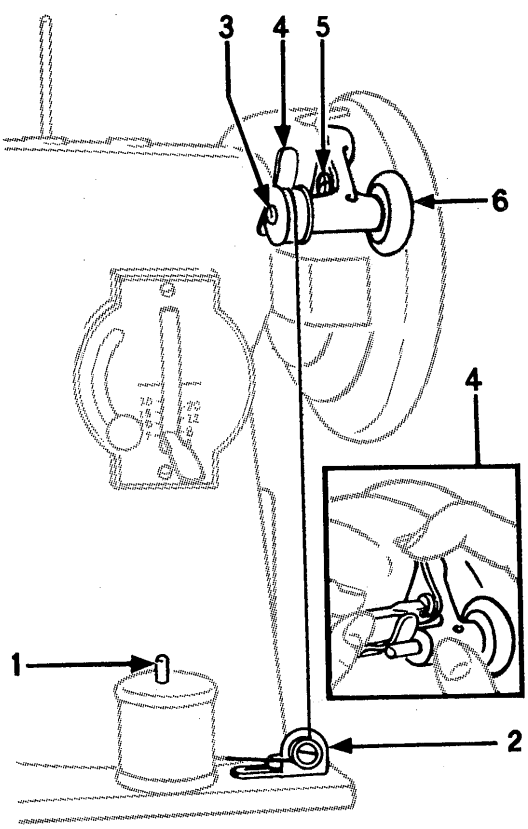

FIG. 8.

To Wind the Bobbin—Machine 99K (New Style).

- Loosen stop motion screw.
- Place empty bobbin on winder spindle.
- Turn bobbin until hole in right side engages pin in spindle.
- Press winder down until latch engages.
- Place spool of thread on spool pin.
- Thread machine as shown in Fig. 9.
- Hold end of thread and start machine. (End of thread will break off after a few coils have been wound on bobbin).
- When bobbin is full, winder will stop automatically.
- Remove bobbin and retighten stop motion screw.

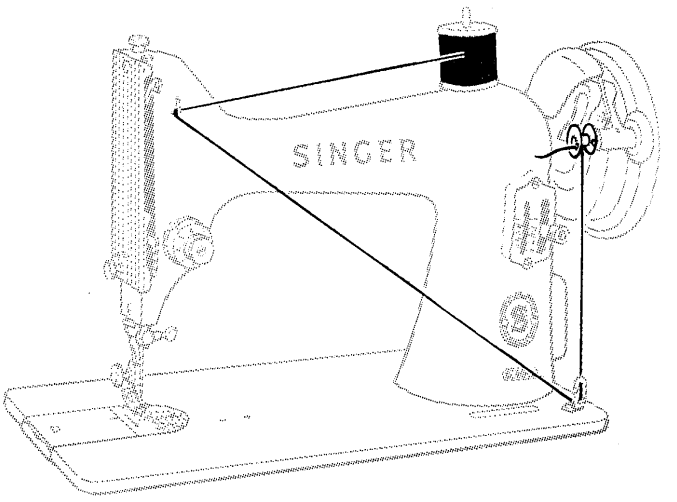

FIG. 9.

To Wind the Bobbin—Machines 185K and 327K

- Loosen stop motion screw.
- Place empty bobbin on spindle.
- Press bobbin winder down against hand wheel.
- Thread machine as shown in Fig. 10.
- Hold thread end and start machine.
- When bobbin is full, stop machine.
- Lift bobbin winder away from hand wheel and remove bobbin.
- Tighten stop motion screw.

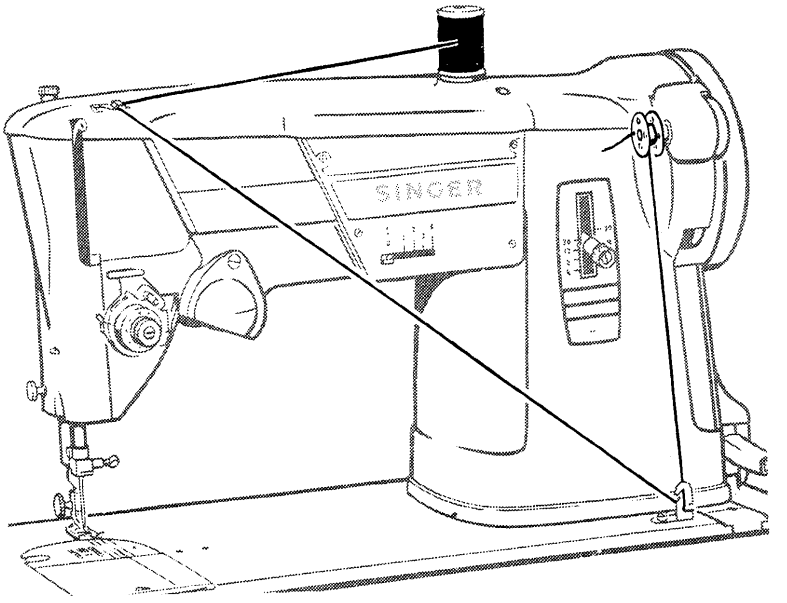

FIG. 10.

To Wind the Bobbin—Machines 328K and 329K.

- Loosen stop motion screw.
- Place empty bobbin on spindle.
- Press bobbin winder down against hand wheel.
- Place spool of thread on spool pin.
- Thread between tension discs and through bobbin as shown in Fig. 11.
- Hold end of thread and start machine. (End of thread will break off after a few coils have been wound on bobbin).

When Bobbin is Full

- Stop machine.
- Lift bobbin winder away from hand wheel and remove bobbin.
- Tighten stop motion screw.

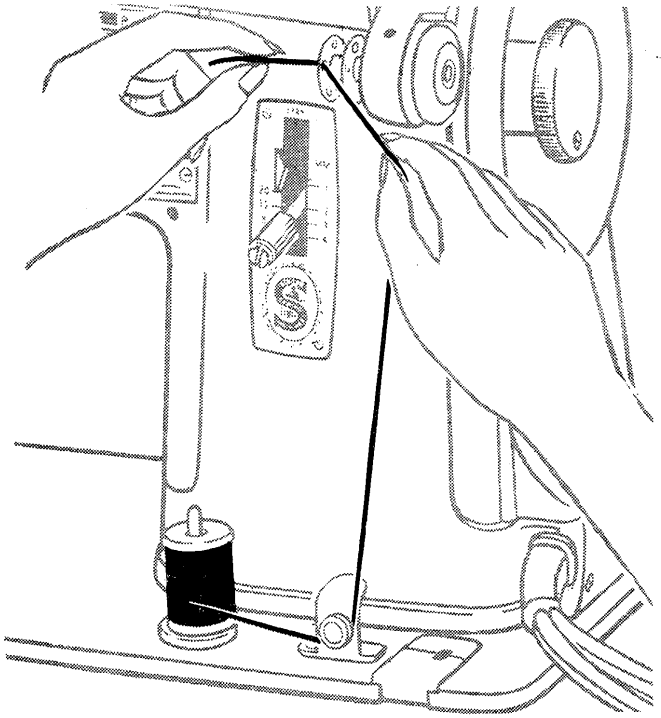

FIG. 11.

To Wind the Bobbin—Machine 404.

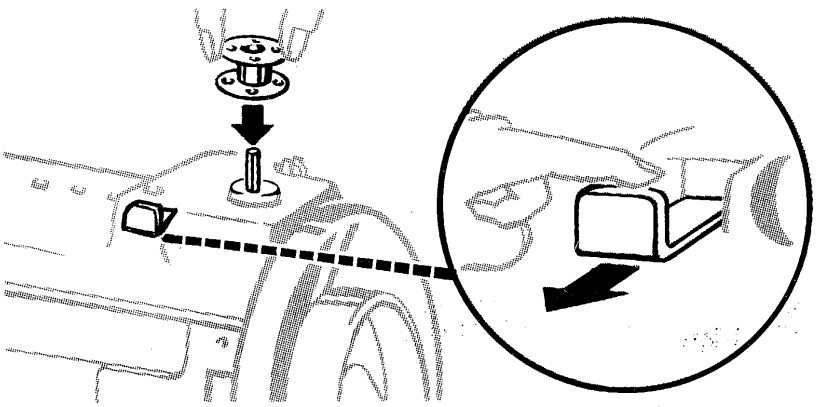

- Loosen stop motion screw.
- Place bobbin on spindle.
- Pull out bobbin winder engaging slide as shown in Fig. 12.
- Place spool of thread on spool pin and thread machine as shown in Fig. 13.

FIG. 12.

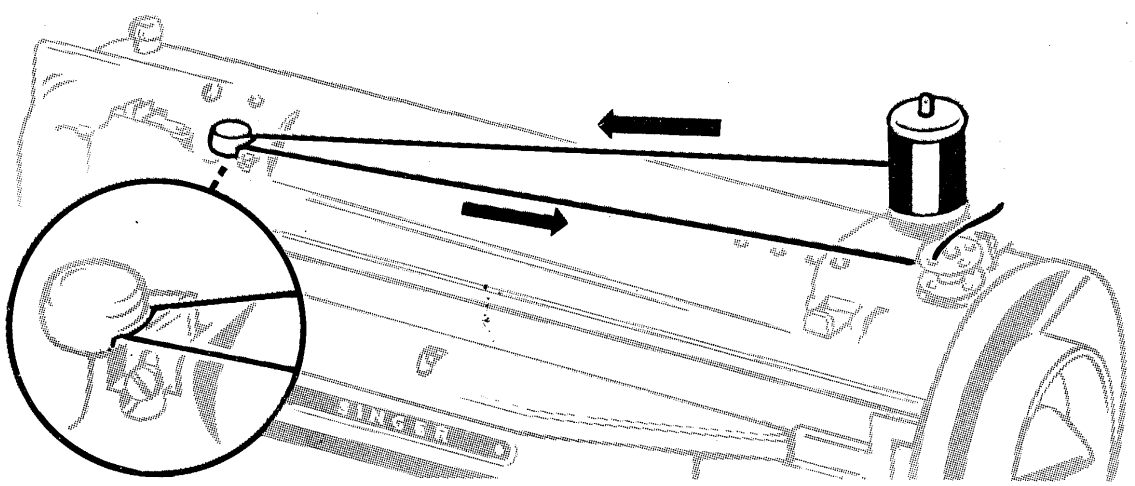

FIG. 13.

Wind the Bobbins Evenly.

Bobbins must be wound evenly in order that they may work properly in the machine. In winding them, see that the thread is placed smoothly and evenly. A correctly wound bobbin will insure the thread running smoothly from the shuttle and prevent uneven stitching, which may occur if the bobbin is not properly wound.

15K80, 15K110, 99K (New Style), 185K, 201K, 327K, 328K and 329K.

If the thread does not wind evenly on the bobbin, loosen the screw which holds the bobbin winder tension bracket (see 2, Fig. 8) on the machine bed and slide the bracket to the right or left as may be required, then tighten the screw.

Always have a sufficient quantity of bobbins on hand and never wind thread on a partly wound bobbin containing thread of another colour. Bobbins so wound are usually uneven and cause trouble in the bobbin case.

When a rubber ring becomes worn or oil has come in contact with it, the ring will not grip the wheel and will slip when winding a bobbin. A worn or oily ring should be replaced.

Relative Sizes of Needles and Threads.

Needles used, Catalogue 2020 (15 × 1)

Types of Fabrics	Thread Sizes	Machine Needle Sizes	Machine Stitches per Inch		Hand Needle
			Inside Seams	Top Stitching	
Filmy Materials Comparable to Net—Marquisette—Chiffon—Silk—Chiffon Velvet—Ninon—Nylon Sheers	100 Cotton A Silk Nylon	9	15-20	20-30	10
Sheer Materials Comparable to Lawn—Organdie—Dimity—Batiste—Pure Silks—Paper Taffeta—Silk—Synthetic Tricots—Synthetic Sheers	80 to 100 Cotton A Silk Nylon	11	12-15	15-20	9
Lightweight Materials Comparable to Gingham—Chambray Sheers—Wool Crêpe—Taffeta—Synthetic Velvets—Satin—Synthetic or Wool Jersey	50 to 80 Cotton A Silk Nylon	14	12	16	8
Medium Lightweight Materials Comparable to Poplin—Pique—Percale—Cretonne—Chintz—Faille—Bengaline—Wool Flannel—Crêpe—Lightweight Suitings	50 Mercerised 60 to 80 Cotton A Silk Nylon	14	12	16	7-8
Medium Heavy Materials Comparable to Cotton Velveteen—Corduroy—Gabardine—Rep—Coatings and Heavy Suitings	Heavy-Duty Mercerised 40 to 50 Cotton A Silk	16	10	12	6
Heavy Materials Comparable to Sailcloth—Denim—Ticking—Overcoatings	Heavy-Duty Mercerised 30-40 Cotton	16-18	8	10	4-5
Very Heavy Materials Comparable to Canvas—Duck	40 to 60 Linen 20-24 Cotton A Silk	18-19	6	8	3
Plastic Materials	Nylon or Mercerised Cotton	9-11	10	12	9-11

The Importance of using Correct Needles and Thread.

A perfect stitch can be obtained only when the thread is selected to suit the material to be stitched and the needle is of the correct size for the thread. If the needle is too fine for the thread and material, it is likely to break when crossing a seam. If a coarse needle is used on fine material, the perforations made will show in the finished work. A table of correct needles for the various sizes of silk and cotton is given on page 11. This table should be carefully followed when ordering needles and when changing them for various classes of work.

NOTE : It is essential for good work that the needle be perfectly straight and have a sharp point. Only SINGER needles should be used in SINGER machines.

Needle Threaders.

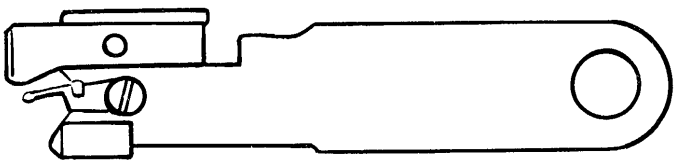

No. 121632.

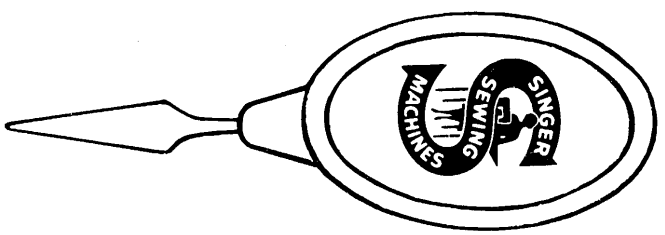

No. 161307.

FIG. 14. SINGER NEEDLE THREADERS.

The Singer Needle Threaders save time, are inexpensive, simple to use and indispensable to all. They can be used for threading hand sewing needles as well as sewing machine needles.

To Set the Needle in Machines 15K, 66K, 99K and 185K

(See Fig. 15).

- Raise needle bar to its highest point by turning hand wheel toward you.
- Loosen clamp screw A.
- Insert needle (flat side to the right) up into needle clamp as far as it will go.
- Tighten clamp screw A.

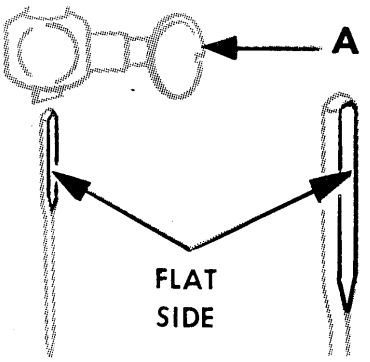

FIG. 15.

To Set the Needle in Machine 201K

(See Fig. 16).

- Raise needle bar to its highest point by turning hand wheel toward you.
- Loosen clamp screw A.
- Insert needle (flat side to the left) up into needle clamp as far as it will go.
- Tighten clamp screw A.

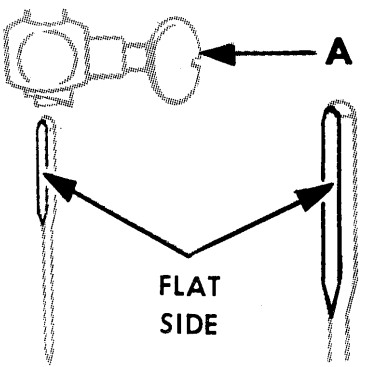

FIG. 16.

To Set the Needle in Machines 327K, 328K, 329K and 404

(See Fig. 17).

- Raise needle bar to highest point by turning hand wheel toward you.
- Loosen needle clamp screw.
- Insert needle upward into clamp as far as it will go, with flat side of needle to back and **long groove toward you.**
- Tighten needle clamp screw.

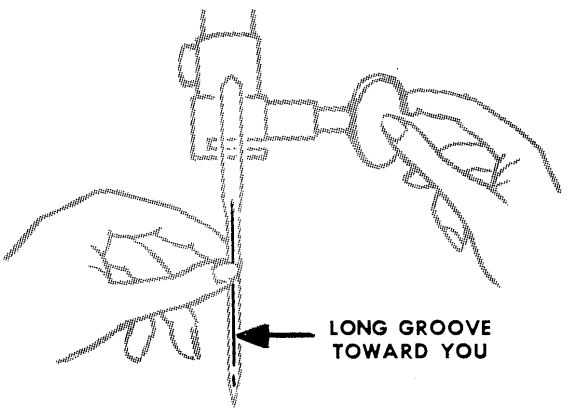

FIG. 17.

N.B.—You will note that the side of the needle with the flat on the shank has a short groove at the eye while the other side has a long groove. The thread must pass down this long groove when sewing. If the needle is not placed correctly in the machine it will not sew.

Particular attention is drawn to the fact that in Machine 201K the needle is set with the flat side of the shank to the left; on 327K, 328K and 329K Machines the flat side is to the back, while in the other Singer family machines referred to in this book the flat side must be to the right.

Threading Central Bobbin Machine No. 15K.

UPPER THREADING

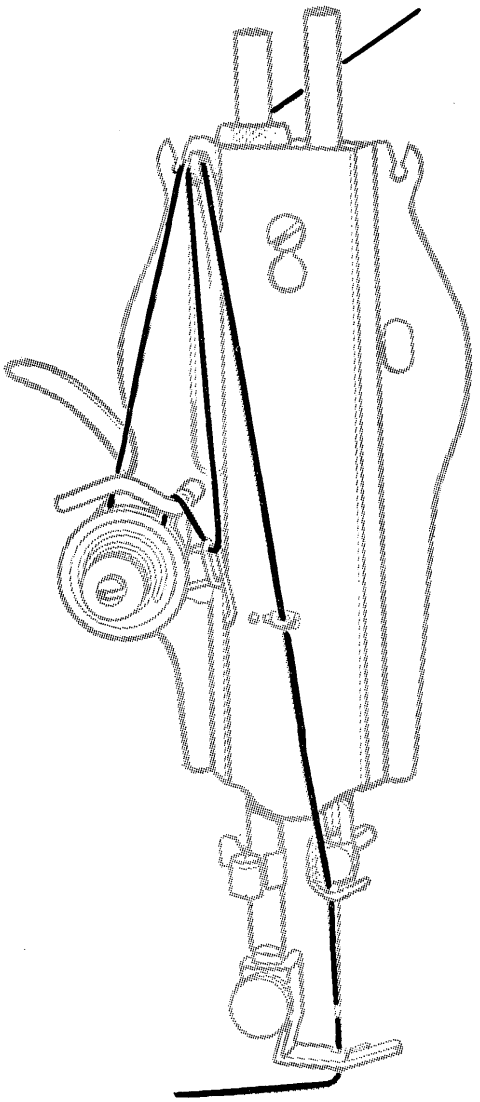

FIG. 18.

- Raise take-up lever to its highest point.
- Place spool of thread on spool pin.
- Thread machine as shown in Fig. 18.
- Thread needle from left to right.

UNDER THREADING

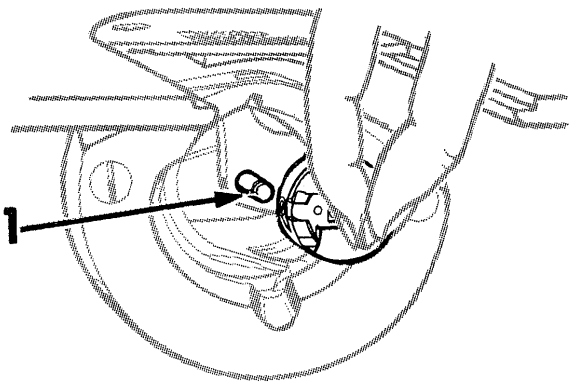

FIG. 19.

- Open bed slide.
- Open bobbin case latch as shown in Fig. 19 and withdraw bobbin.
- Release the latch, turn the bobbin case downward and bobbin will drop out.

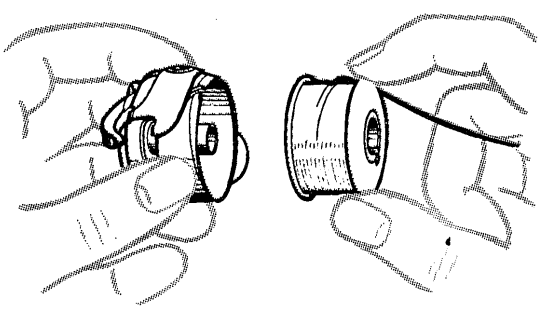

FIG. 20.

- Hold bobbin case with slot in edge at the top and wound bobbin with thread leading on top towards the right, as shown in Fig. 20.

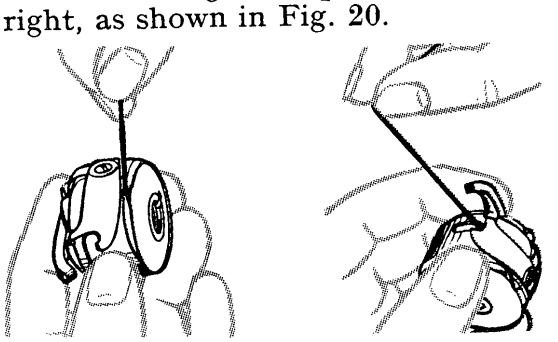

FIG. 21.

- Pull thread into slot as shown in left hand illustration, Fig. 21.
- Draw the thread down, under the tension spring, and to the left into the delivery eye at its end, as shown in right hand illustration, Fig. 21.

Threading Oscillating Hook Machines Nos. 66K, 99K and 185K

UPPER THREADING

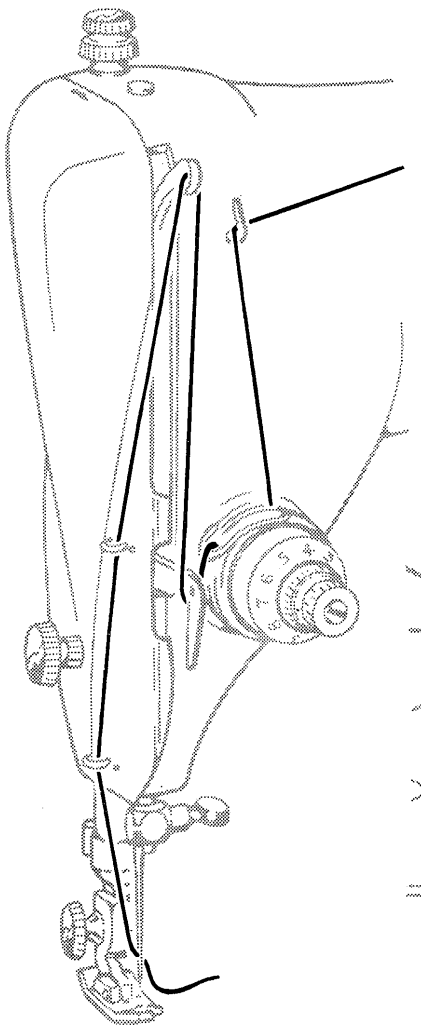

FIG. 22.

- Raise take-up lever to its highest point.
- Place spool of thread on spool pin.
- Thread machine as shown in Fig. 22.
- Thread needle from left to right.

UNDER THREADING

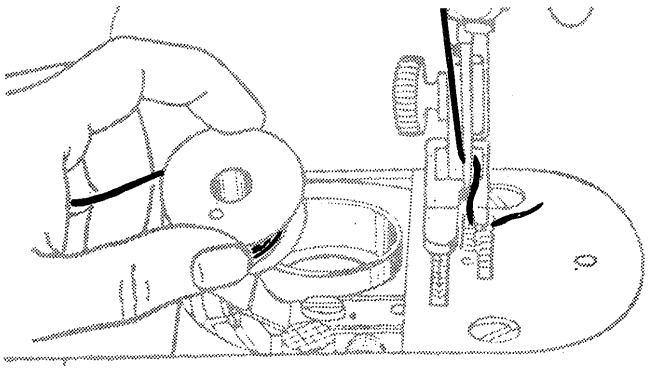

FIG. 23.

- Hold bobbin so that thread leads off in direction shown in Fig. 23.

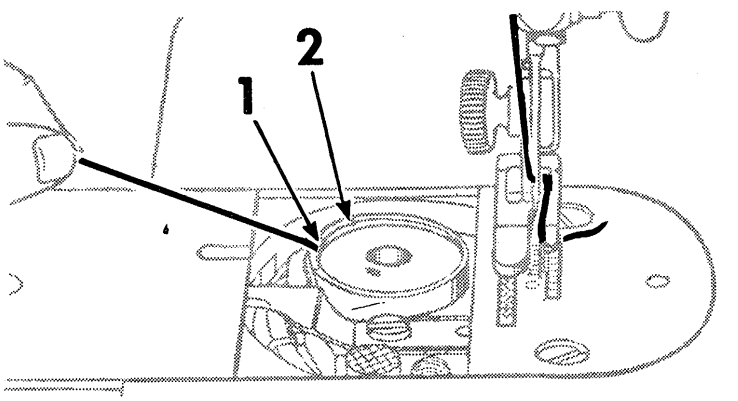

FIG. 24.

- Place bobbin in case and draw thread into slot 1, Fig. 24.

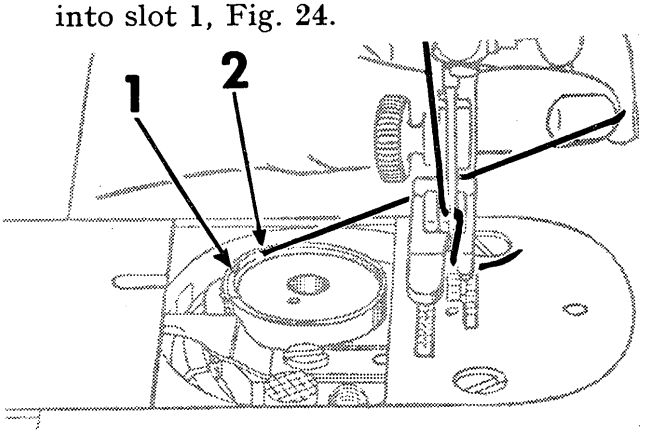

FIG. 25.

- Draw thread between case and tension spring until it reaches notch 2, Fig. 25.
- Pull about 3 inches of thread across bobbin.
- Close slide plate, allowing thread to enter notch in slide plate.

Threading Rotary Hook Machine No. 201K.

UPPER THREADING

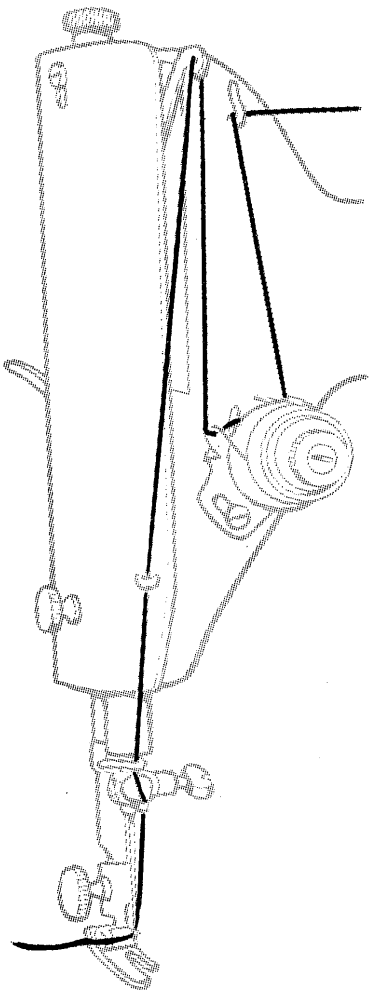

FIG. 26.

- Raise take-up lever to its highest point.
- Place spool of thread on spool pin.
- Thread machine as shown in Fig. 26.
- Thread needle from right to left.

UNDER THREADING

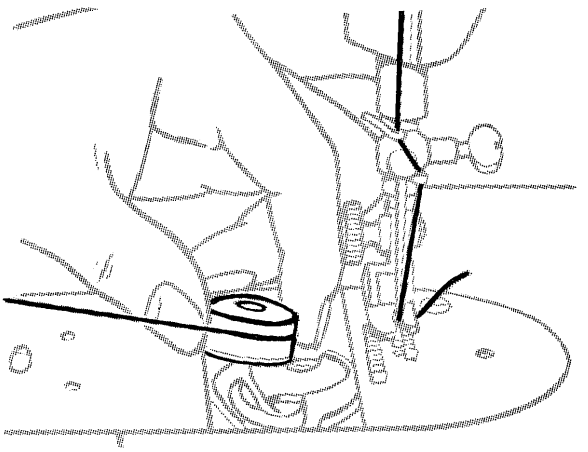

FIG. 27.

- Hold bobbin so that thread leads off in direction shown in Fig. 27.

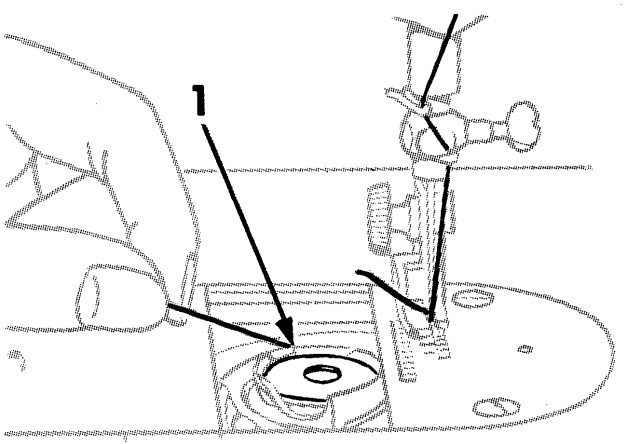

FIG. 28.

- Place bobbin in case and draw thread into slot 1, Fig. 28.
- Draw thread between bobbin case and tension spring until it reaches notch 2, Fig. 29.

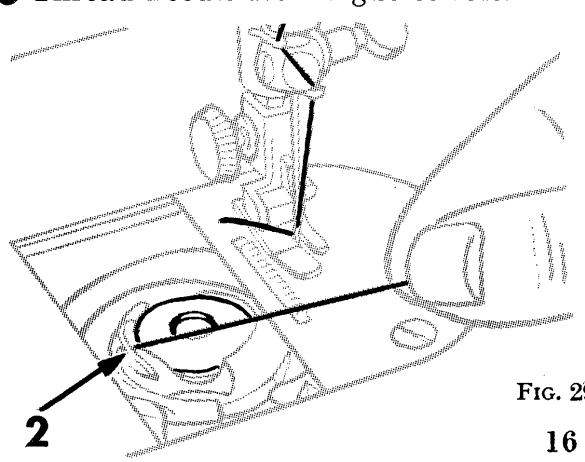

FIG. 29.

- Pull about 3 inches of thread across bobbin.
- Close slide plate.

Threading Oscillating Hook Machines Nos. 327K, 328K, 329K and 404

UPPER THREADING

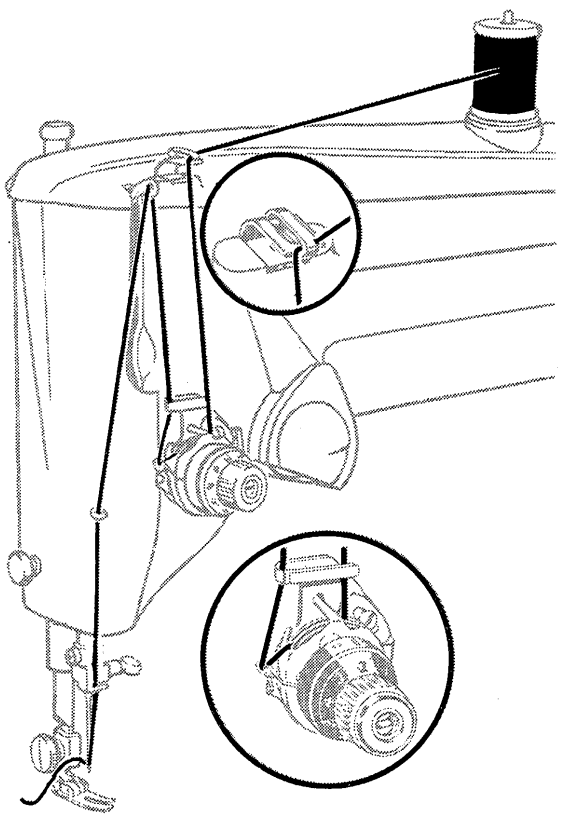

FIG. 30.

- Raise take-up lever to its highest point.
- Place spool of thread on spool pin.
- Thread machine as shown in Fig. 30.
- Thread needle from front to back.

UNDER THREADING

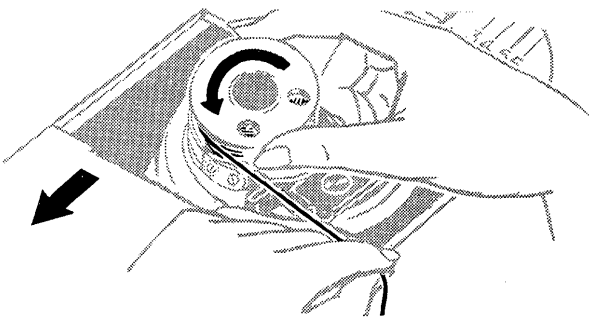

FIG. 31.

- Open slide plate. Insert bobbin with thread leading off as shown in Fig. 31.

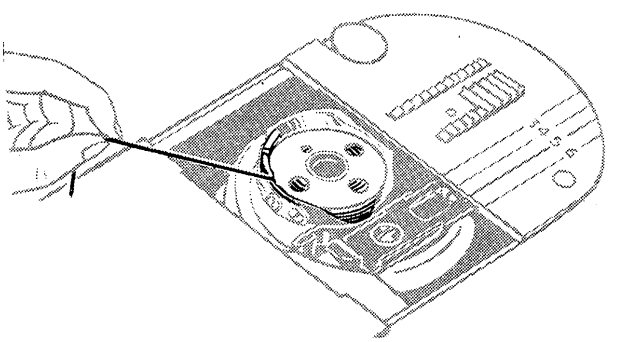

FIG. 32.

- Place bobbin in case.
- Lead thread into slot and under spring as shown in Fig. 32.

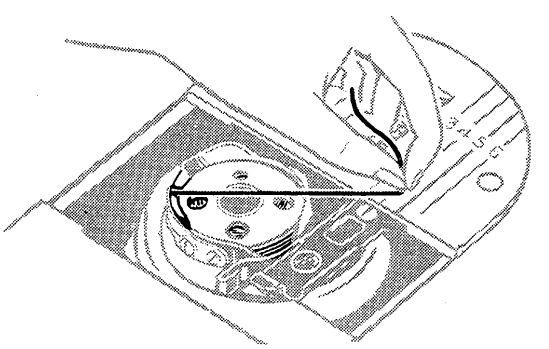

FIG. 33.

- Draw thread into notch at end of spring; pull about 3 inches of thread across bobbin as shown in Fig. 33.
- Close slide plate.

The Necessity for Proper Tensions.

The tensions on the sewing machine must be adjusted to suit various materials. There are two tensions, the upper and the lower. The upper tension controls the thread from the needle, while the lower tension controls the thread from the shuttle or bobbin case.

The definition of the word tension as given in the dictionary is: "stress by pulling." It is the pulling of the threads together that completes a stitch made by the sewing machine. After the needle thread passes around the shuttle, the upper thread is pulled by the take-up lever to take up the slack and complete the stitch by locking both threads together. If both threads are under proper tension, the lock occurs in the centre of the material and a perfect stitch is formed, as in Fig. 34.

To Regulate the Tensions.

For ordinary stitching, the tension on the upper and under threads should be equal and just sufficiently strong to lock both threads in the centre of the work as shown in Fig. 34.

If either tension is stronger than the other, imperfect stitching will be the result. (See Figs. 35 and 36).

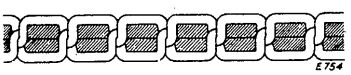

FIG. 34. CORRECT STITCH.

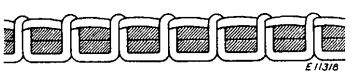

FIG. 35. NEEDLE THREAD TENSION. TOO STRONG.

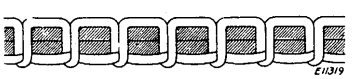

FIG. 36. NEEDLE THREAD TENSION TOO WEAK.

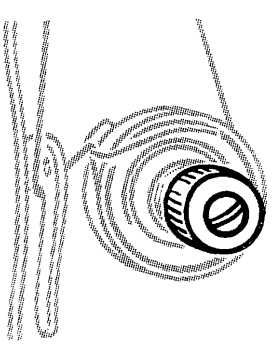

THUMB NUT

FIG. 37.

A correct stitch can usually be obtained by varying the tensions on the upper or needle thread (see Fig. 37)—To increase the tension on the **upper** thread, turn the thumb nut to the right; to lessen the tension turn the nut to the left.

The tension on the **under** thread is regulated by the small screw holding the spring under which the thread passes on the long shuttle or the round bobbin case, but as all machines are correctly adjusted before leaving the factory, it is seldom necessary to alter this **under** tension. Should it become necessary, however, to do so, tighten the tension spring screw to increase the tension and loosen the screw slightly to lessen the tension, using the small screwdriver provided for the purpose.

The tension on the upper thread should be adjusted only when the presser foot is down, and the amount of tension should be so that the pull on both the upper and the under threads is as nearly as possible equal.

Machines 99K, 185K, 201K, 327K, 328K and 329K are furnished with a tension indicator and flange (C and B, Fig. 38). The index flange (B) is marked with numbers 0 to 9 indicating the different degrees of tension that can be produced. By noting a particular number opposite the white line when set for a satisfactory tension on work being stitched, this number can be readily reverted to when changing from one class of material to another. The higher numbers denote increased tension and the lower numbers less tension. Notice also that the tension indicator (C) is marked with the signs + and — which indicate the direction to turn the thumb nut (A) for more or less tension.

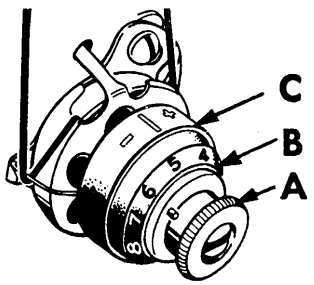

FIG. 38.

To Prepare for Sewing.

Pull sufficient thread through the needle and with the left hand hold the end, leaving it slack from the hand to the needle. Turn the hand wheel towards you until the needle moves down and up again, thus catching the under thread; then, when the take-up lever is at its highest point, pull the end of the needle thread you are holding and the under thread will be brought up with it through the needle hole in the throat plate, as shown in Fig. 39. Lay both ends of thread under and to the back of the presser foot, and having inserted the material to be stitched, lower the presser bar lifter and commence to sew by turning the hand wheel toward you.

NOTE.—Do not try to help the feeding of the work by pulling the material, as this may deflect the needle and cause it to break. The machine feeds without any assistance.

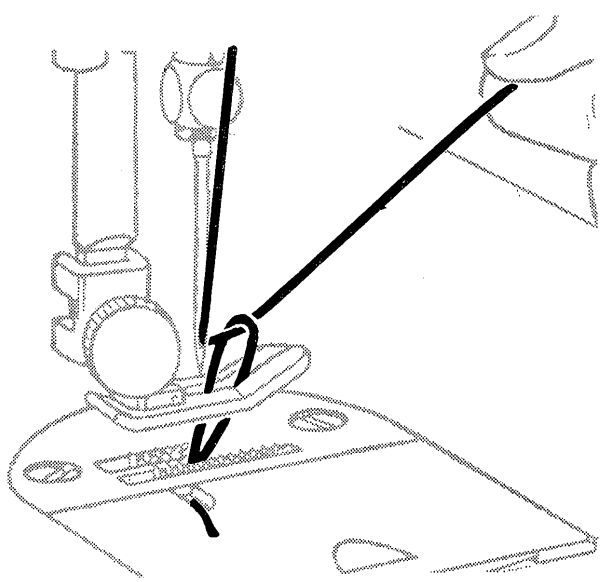

FIG. 39. PULLING UP UNDER THREAD.

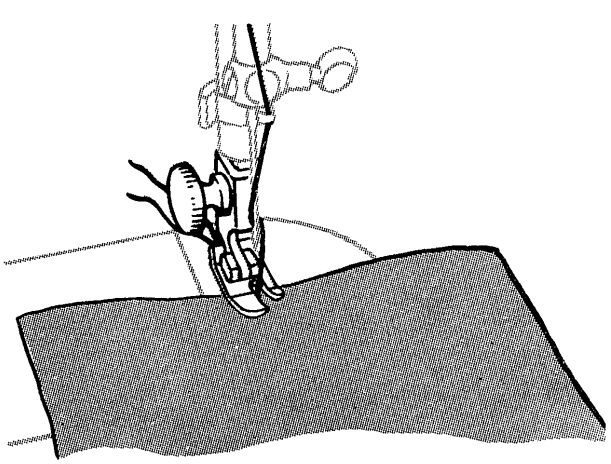

The edge of the garment to be stitched should be placed just far enough under the presser foot to allow the first stitch to be taken in the material. Never place the material so that the first stitch will not be taken in it, as this would cause the thread to become entangled in the lower mechanism.

Always lower the presser foot before starting to sew. See Fig. 40 for the proper starting of material under the presser foot.

FIG. 40. BEGINNING A SEAM.

Finishing a Seam.

When finishing a seam, never sew beyond the end of the material. Stop the machine by placing the hand on the hand wheel shortly before the end of the seam is reached. (See Fig. 41). This will prevent the thread from becoming entangled in the lower mechanism.

Do not attempt to release the material from the machine until the take-up lever is at the highest point. When the take-up is in this position and the presser foot is raised, the upper tension is released.

Always remove the material from the machine by pulling it back and to the left, and sever the threads by passing them over the thread cutter. Hold thread with both hands and cut with a quick downward motion.

Always leave 3 or 4 inches of thread to prevent it being pulled through the needle when commencing to sew the next seam.

On machines equipped with **reversible feed** seams can be reinforced at the beginning and the end by **back tacking.**

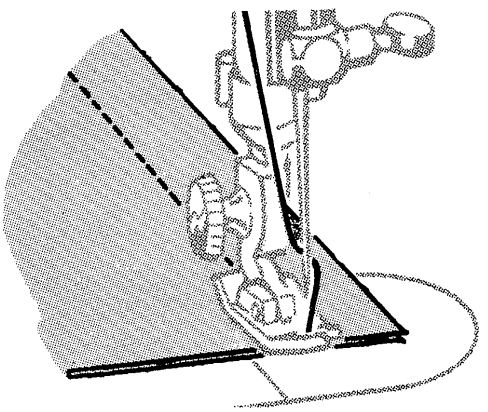

FIG. 41. FINISHING A SEAM.

Hints for Sewing Various Seams.

Always keep the bulk of the material to the left of the presser foot. This allows greater freedom of feeding than when the garment is allowed to pass under the arm of the machine.

Stitch bias seams with the bias instead of against it. For example, when sewing two bias seams on a skirt, start at the bottom of the garment and stitch up. This prevents the seams from stretching. The tensions should be sufficiently loose to prevent puckering of the seams.

When sewing a straight edge to a bias edge, place the bias piece against the feed. This allows the feed to take care of the possible stretching of the bias and permits the operator to guide the stitching from the warp or lengthwise threads of the material.

The Cloth Guide.

The cloth guide is an aid to straight stitching, and is fastened to the machine by means of the thumb screw, as shown in Fig. 42. It can be adjusted to various distances from the needle, as desired.

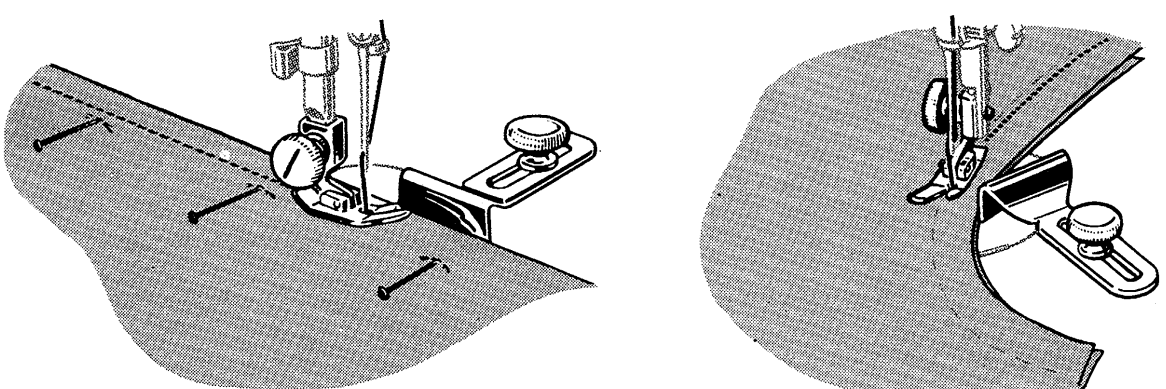

FIG. 42.

To Regulate the Length of Stitch.

When stitching fine material use a fine needle, fine thread, and a short stitch. Heavy material requires a coarse needle and thread and a longer stitch. (See chart on page 11).

The stitch on the 15K26 machine is regulated by the thumb screw in the slot on the arm (see Fig. 43). To lengthen the stitch on this machine, loosen the thumb screw and move it downwards. To shorten the stitch move the screw upwards. When the desired length of stitch is obtained tighten the thumb screw. The stitch on the 15K80 is regulated in the same way except that the thumb screw is moved upwards to lengthen and downwards to shorten.

About 18 stitches to the inch makes a suitable seam for ordinary sewing. Sew on a double thickness of material, measure off one inch and count the stitches.

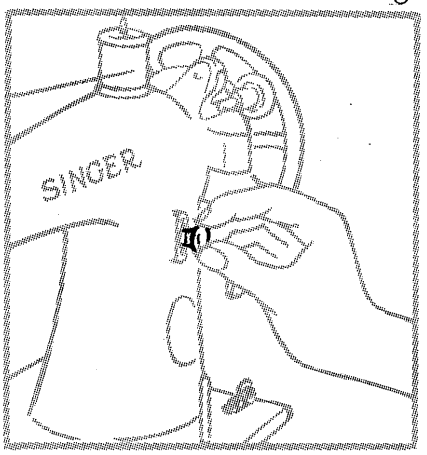

FIG. 43. STITCH REGULATING SCREW ON SINGER 15K26 AND 15K80 MACHINES.

To Regulate the Length of Stitch and Direction of Feed on Machines 99K (New Style) and 185K. (See Fig. 44).

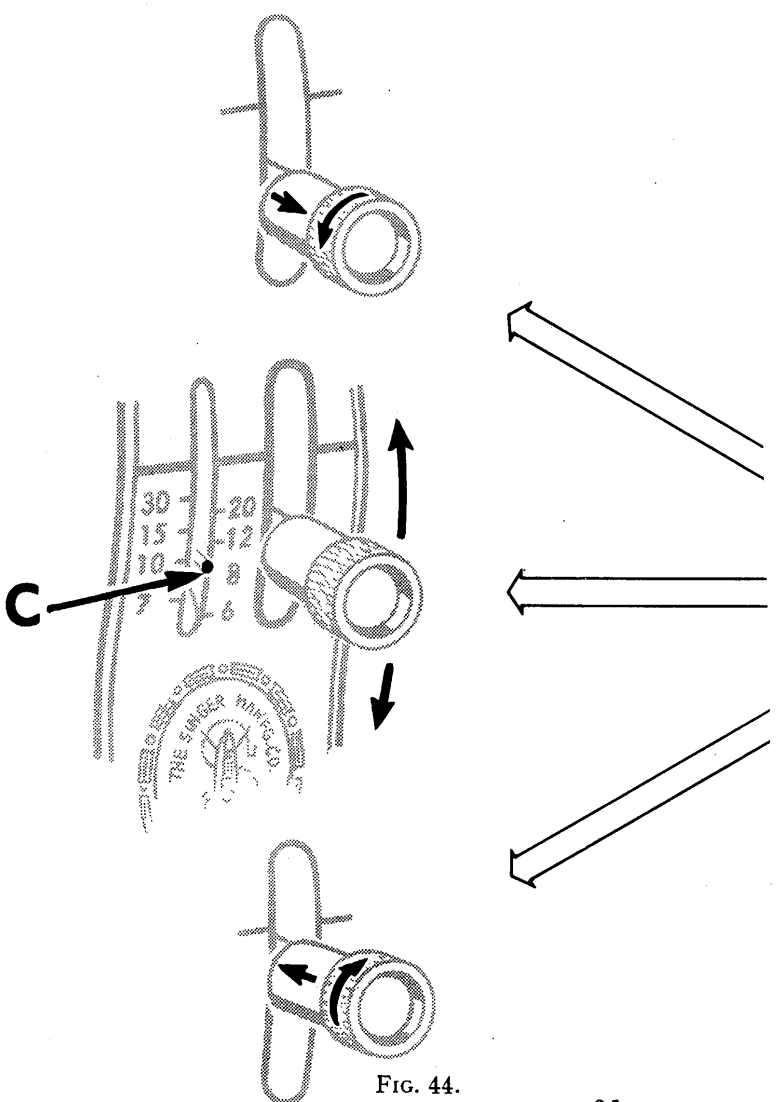

FIG. 44.

Numerals on the indicator plate represent the approximate number of stitches per inch.

The "red dot" C indicates the stitch setting.

To set stitch length —

- Turn thumb nut to the left.
- Move lever until "red dot" C is at desired stitch setting.
- Turn thumb nut to the right until it rests against indicator plate.

Once thumb nut is against indicator plate, **reverse stitching** is accomplished by raising lever to its highest position.

To Regulate the Length of Stitch and the Direction of Feed on Machine 201K

(See Fig. 45).

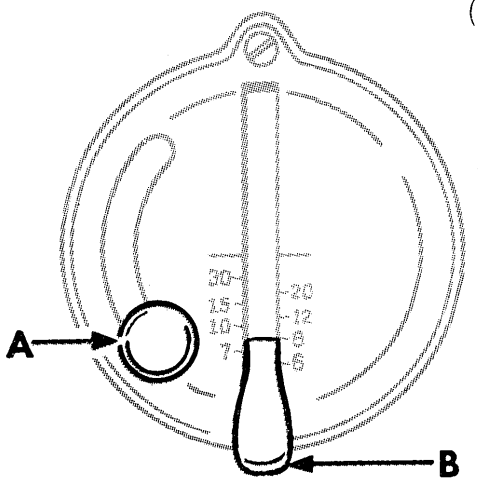

FIG. 45.

Numerals on the indicator plate represent approximate number of stitches per inch.

To set stitch length—

- Loosen thumb screw A and lower to bottom of slot.
- Move lever B until its top edge is level with desired stitch setting.
- Raise screw A as far as it will go and tighten. Machine will now make the desired number of stitches forward.

To reverse stitching—

- Set as above then raise lever B as far as it will go.

To Regulate the Length of Stitch and Direction of Feed on Machine 327K

(See Fig. 46).

The numerals on the indicator represent the number of stitches per inch.

To set stitch length—

- Release pointer by turning thumb nut to the left.
- Position lever for desired stitch length (**the higher the number, the shorter the stitch length**).
- Tighten pointer against indicator plate by turning thumb nut to the right.

Once the pointer has been tightened against the plate, **reverse stitching** is accomplished by raising the lever to its highest point.

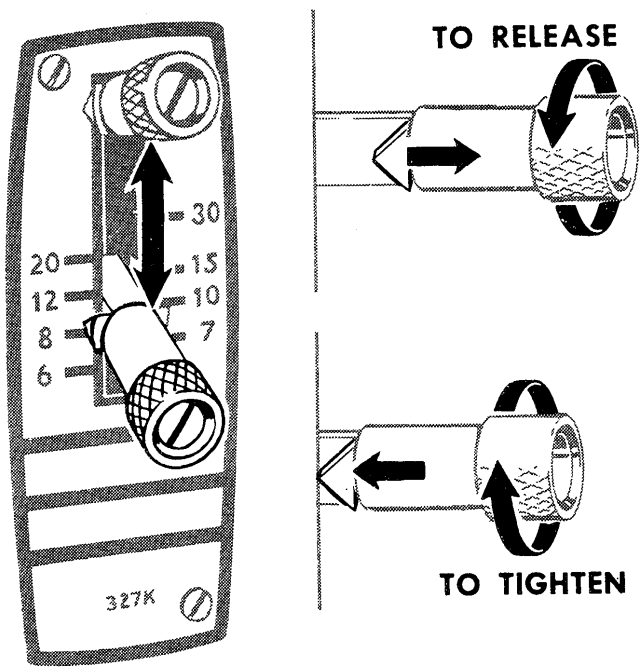

FIG. 46.

To Regulate the Length of Stitch and the Direction of Feed on Machines 328K, 329K and 404. (See Fig. 47).

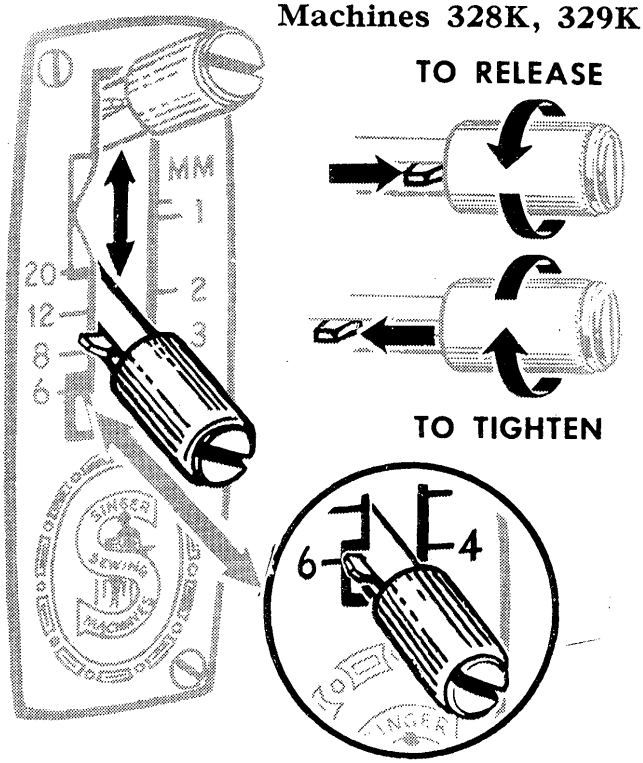

FIG. 47.

Numerals on left side of indicator represent number of stitches per inch.

Numerals on right side represent stitch length in millimeters.

Upper inclined area of the regulator represents stitch lengths above **20.**

Lower inclined area of the regulator allows the No. **6** stitch length setting to be "locked" in place when stitching folds, pleats or multiple layers of heavy fabric.

To set stitch length—

- Release pointer by turning thumb nut to the left.
- Position lever for desired stitch length.
- Tighten pointer against plate by turning thumb nut to the right.

Once the pointer has been positioned, **reverse stitching** is accomplished by raising the lever to its highest point. The No. **6** "locked" position must be unlocked for reverse stitching.

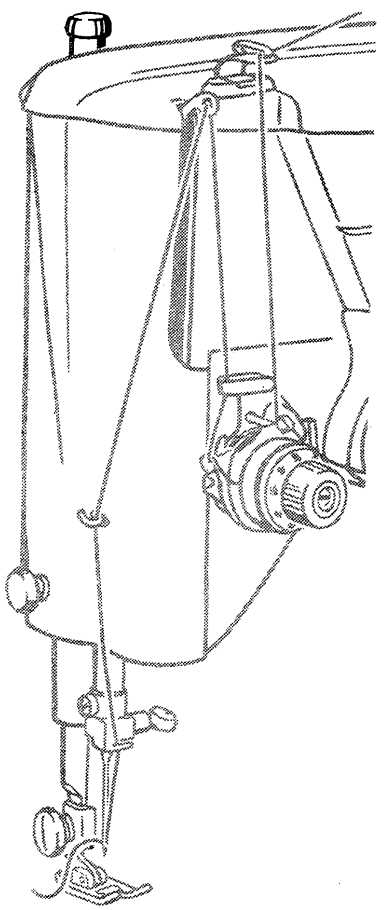

FIG. 48. PRESSURE ADJUSTMENTS.

PRESSURE ADJUSTMENTS

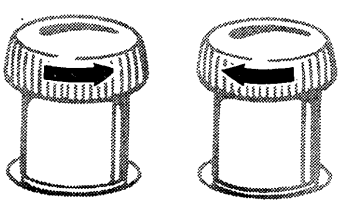

Decrease **Increase**

- To decrease pressure, turn thumb screw upward.
- To increase pressure, turn thumb screw downward.

Smooth, even handling of several thicknesses of fabric results when pressure is correctly regulated.

Surface finish, as well as the weight and texture of the fabric, must be considered in determining the amount of pressure needed.

Adjustment of the thumb screw regulates the amount of pressure exerted on the material while it is being stitched.

Too light a pressure will result in irregular feeding which affects both quality of stitch and evenness of seams.

Too heavy a pressure not only affects stitch and seam quality but will mar smooth surfaces and pile fabrics.

Cleaning and Oiling.

Sewing Machines require oiling and cleaning daily if they are used continuously. If used moderately—a few hours per day—it is sufficient to oil and clean once or twice a week.

Like all other machinery, a sewing machine will not give satisfaction if its working parts are allowed to become dry or gummed with a poor grade of oil. A sewing machine that has not received proper care runs hard and considerable energy will be wasted by using it in such a condition, besides shortening the life of the machine. Before oiling any part of the machine or stand, always remove all dust, lint, threads, etc., especially in and around the Shuttle Race.

A cleaning and oiling lesson is of great value to students as emphasising the necessity of keeping their machines in perfect running order.

The equipment necessary for thoroughly cleaning the machine consists of a duster or piece of soft material, a lint brush, a large screw driver and a small screw driver.

Care should be taken to use high-grade machine oil and one drop should be applied to each bearing or point where there is friction. It is poor economy to use oil of doubtful quality, as it may gum the working parts and necessitate a complete overhaul of the machine by a competent mechanic.

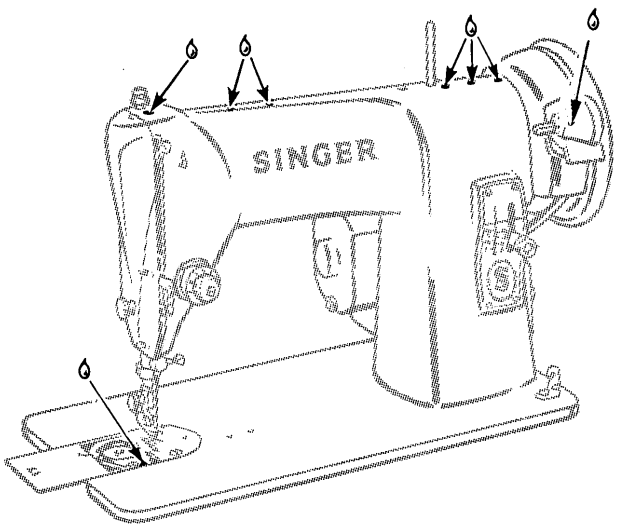

FIG. 48a. CLEANING AND OILING THE HEAD.

Household oils are not suitable for sewing machine use. For Singer machines use only Singer oil, which is specially prepared for sewing machines and is supplied in tins bearing the well-known Singer Red "S."

When making a thorough cleaning and oiling, remove the upper thread, slide plate, bobbin, needle and presser foot. Take out the screws in the throat plate, Fig. 48b, and remove the plate. This will enable you to clean and oil the shuttle race and remove any collection of fluff.

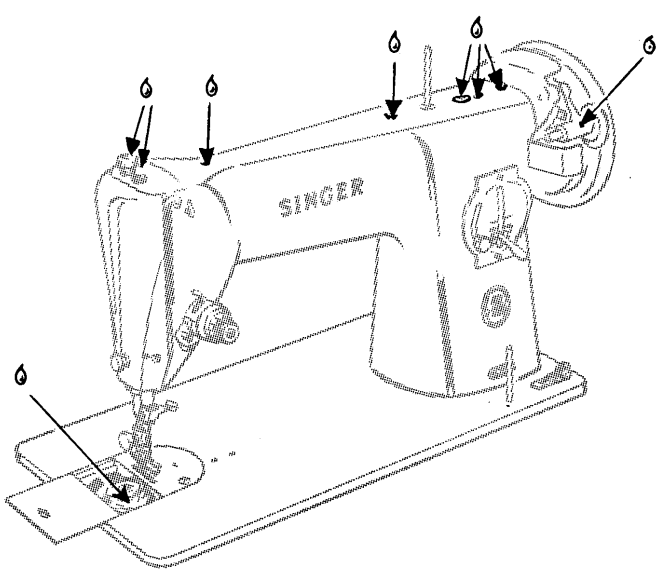

FIG. 48b. OILING POINTS IN HEAD OF MACHINE 201K.

The face plate should also be removed to give access to the oiling points on the needle bar, presser bar and thread take-up. Apply a drop of oil to each oil hole and joint.

Release the belt from the band wheel by moving the lever of the belt shifter, Fig. 49, to the left while the machine is running. To replace the belt, work the treadle slowly with the band wheel turning towards you. The belt will then be automatically brought back into place. Do not throw the belt off to the left side of the band wheel, as it is difficult to replace it from that side.

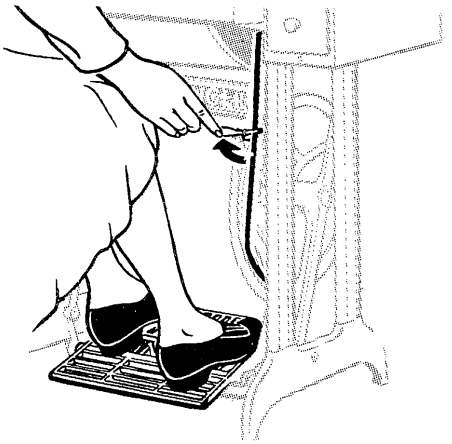

FIG. 49. THE BELT SHIFTER.

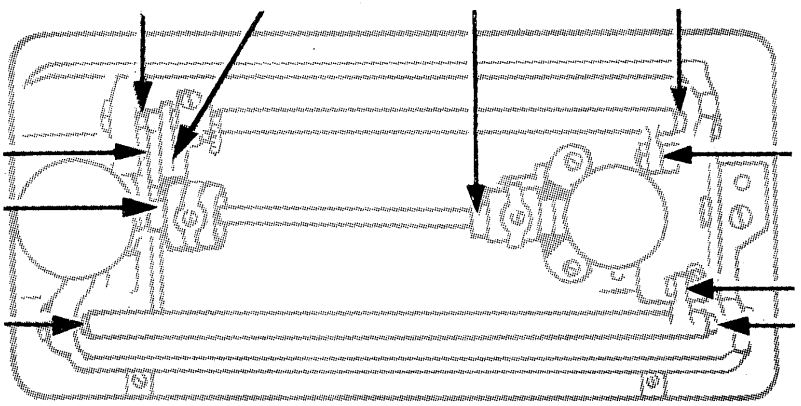

FIG. 50. OILING POINTS BELOW BED OF MACHINE 201K.

After releasing the belt, turn the head of the machine back on its hinges in order to reach the oiling points on its under side. By turning the hand wheel slowly you will be able to observe all working parts. It is sufficient to apply a drop of oil only at each point of contact. After oiling all points on the under side, lower the machine into sewing position and oil each point on top. Wipe away surplus oil and run the machine rapidly for a few minutes so that the oil may penetrate to the bearings. The machine should then be threaded and a few stitches made in a waste piece of material so that any excess oil may be removed.

When a machine is used and cleaned frequently, it is not necessary to remove the throat plate, slide and bobbin each time, but this should be done occasionally in in order to remove lint and dust.

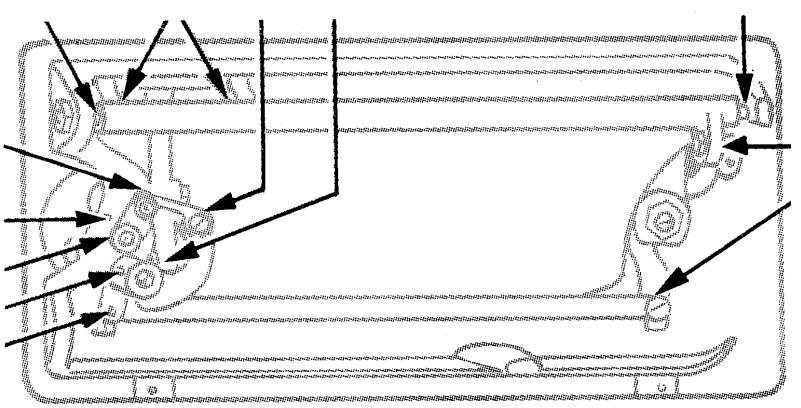

FIG. 51. OILING POINTS BELOW BED OF MACHINE 66K.

To Clean the Stitch-Forming Mechanism of Machines 66K, 99K and 185K.

If the stitch-forming mechanism should become clogged with lint and interfere with the perfect operation of the machine, remove the bobbin case, as described in the following instructions, and dislodge the lint accumulated in the machine.

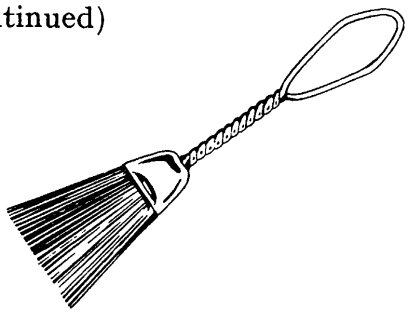

SINGER LINT BRUSH

To Remove Bobbin Case.

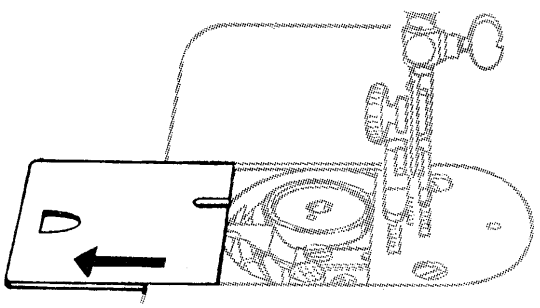

FIG. 52.

- Raise needle and presser foot.
- Draw slide plate to the left.

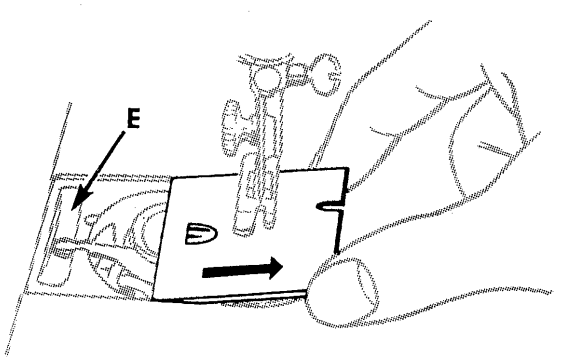

FIG. 53.

- Remove bobbin from case.
- Lift edge of slide plate and draw it to the right until it is disengaged from spring E, Fig. 53.
- Lift and move latch F, Fig. 54, to position shown.
- Grasp bobbin case as shown.
- Tilt case to the left to raise the forked end above bracket G.
- Turn forked end toward you, then lift out bobbin case.

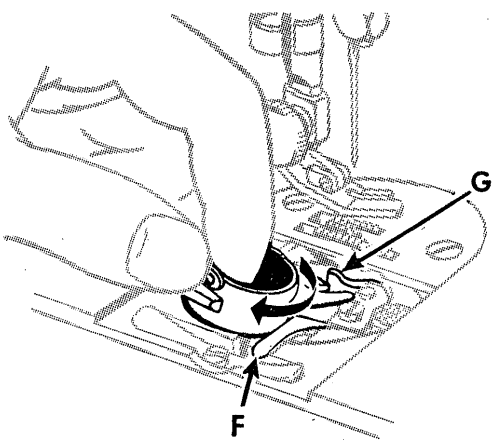

FIG. 54.

To Replace Bobbin Case.

- Replace bobbin case with its fork straddling bracket G, Fig. 55.
- Twist case to the left, then gently press down and back until edge of sewing hook engages groove under rim of bobbin case.
- Return latch F to its original position.

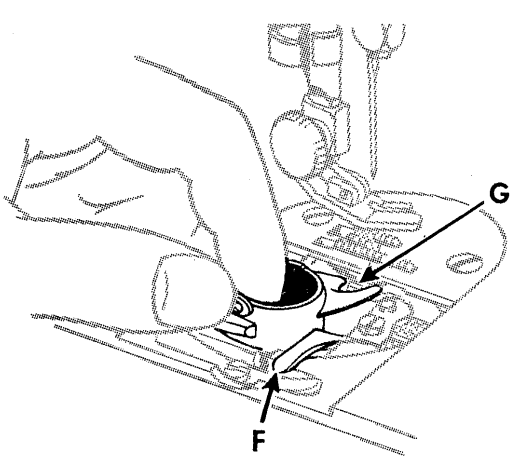

FIG. 55.

To Clean Stitch-Forming Mechanism of Machine 201K

(See Fig. 56)

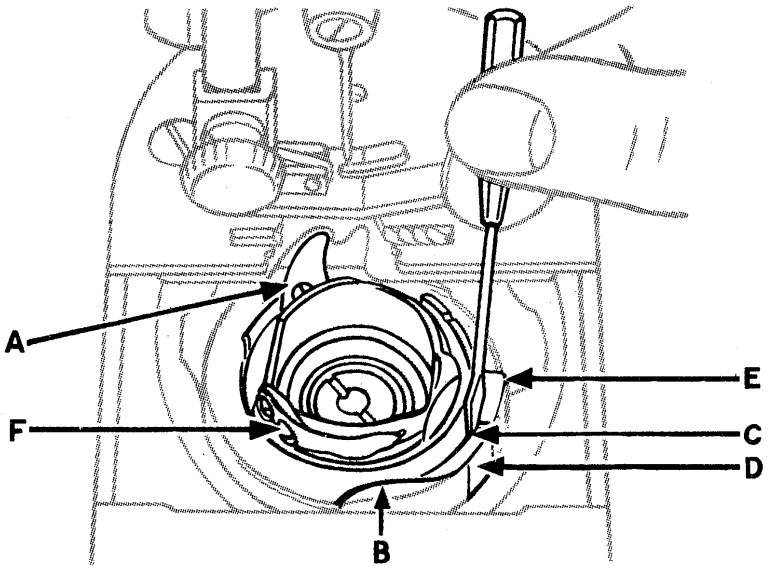

FIG. 56.

To Remove Bobbin Case

- Raise needle and presser foot.
- Draw slide plate to the left.
- Remove bobbin from case.
- Turn hand wheel over toward you until end of hook ring E is toward the front of machine, as shown.
- Insert blade of screwdriver into slot C between the ring and the edge of spring.
- Press down and at same time give screwdriver one half turn so that it will drop into the slot and unlock the spring.
- Hold hand wheel with right hand.
- With left hand, place screwdriver against the edge of the slot in the ring and push it around in the opposite direction to hook rotation until cut-out B is opposite spring D.
- Lift out ring and bobbin case.

To Replace Bobbin Case

- Place bobbin case in position with finger A in the opening in the plate under the feed dog, as shown.
- Turn bobbin case back and forth slightly to ensure proper seating.
- Place ring E in position with cut-out B opposite spring D.
- Press ring into place and turn it in direction of hook rotation until spring locks it in position.
- Replace bobbin.

Cleaning and Oiling—(Continued).

To Clean the Stitch-Forming Mechanism on Machines 327K, 328K, 329K and 404.

To Remove the Bobbin Case

- Raise needle bar and presser bar.
- Open slide plate.
- Remove bobbin from bobbin case.

Remove throat plate as follows

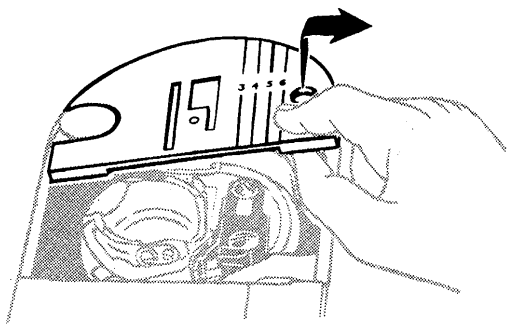

FIG. 57.

- Place thumb under right front end of throat plate and raise until clamping pin lifts up.
- Draw toward right to disengage.

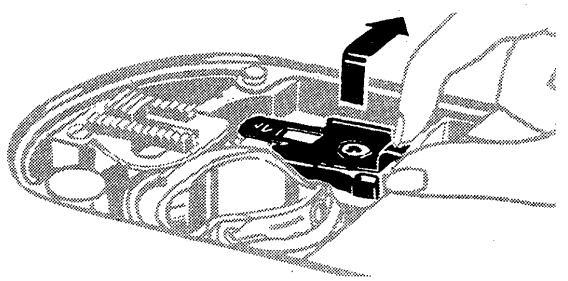

FIG. 58.

- Unlock bobbin case by lifting and pulling holder to right as shown in Fig. 58.

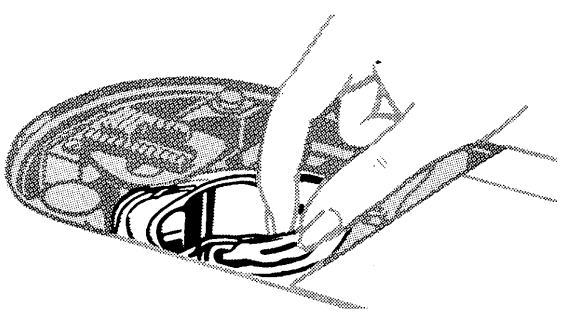

FIG. 59.

- Remove bobbin case from machine.

To Replace the Bobbin Case.

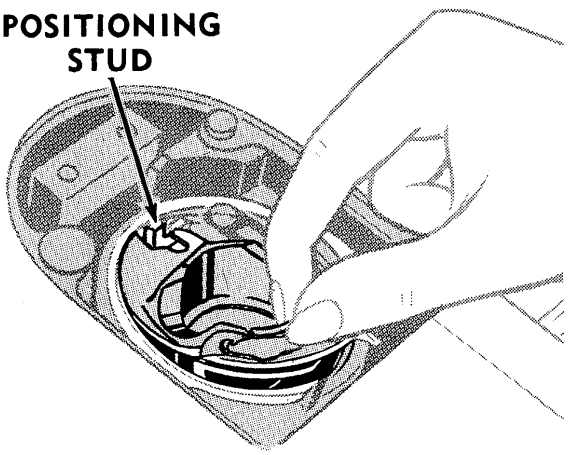

FIG. 60.

- Replace bobbin case so that groove under tension spring fits on hook raceway and fork of case straddles positioning stud.
- Push bobbin case holder to left until it snaps down into lock position.

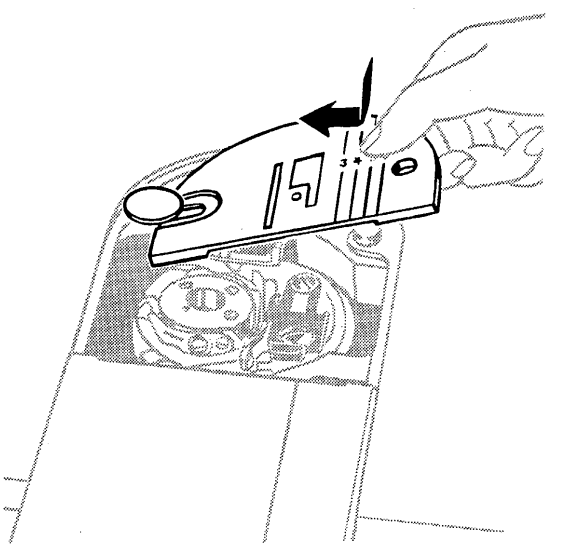

FIG. 61.

- Position fork of throat plate under clamping pin as shown in Fig. 61.
- Push to left and press down until plate snaps into position.
- Close slide plate.

To Oil the Bobbin Winder.

To ensure smooth running of the Bobbin Winder, a drop of oil should be applied to its oiling points. Care should also be taken not to allow oil to come in contact with the rubber ring on the Bobbin Winder, as this causes deterioration of the rubber and also causes the ring to slip on the hub of the hand wheel. In this case, the only remedy is to replace the ring.

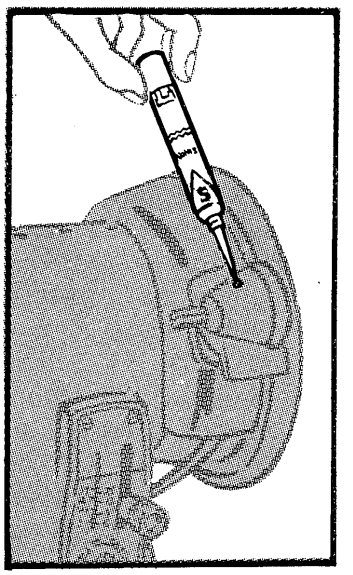

FIG. 62. OILING THE BOBBIN WINDER.

OILING THE STAND

To oil stand, apply a drop of oil to the points indicated.

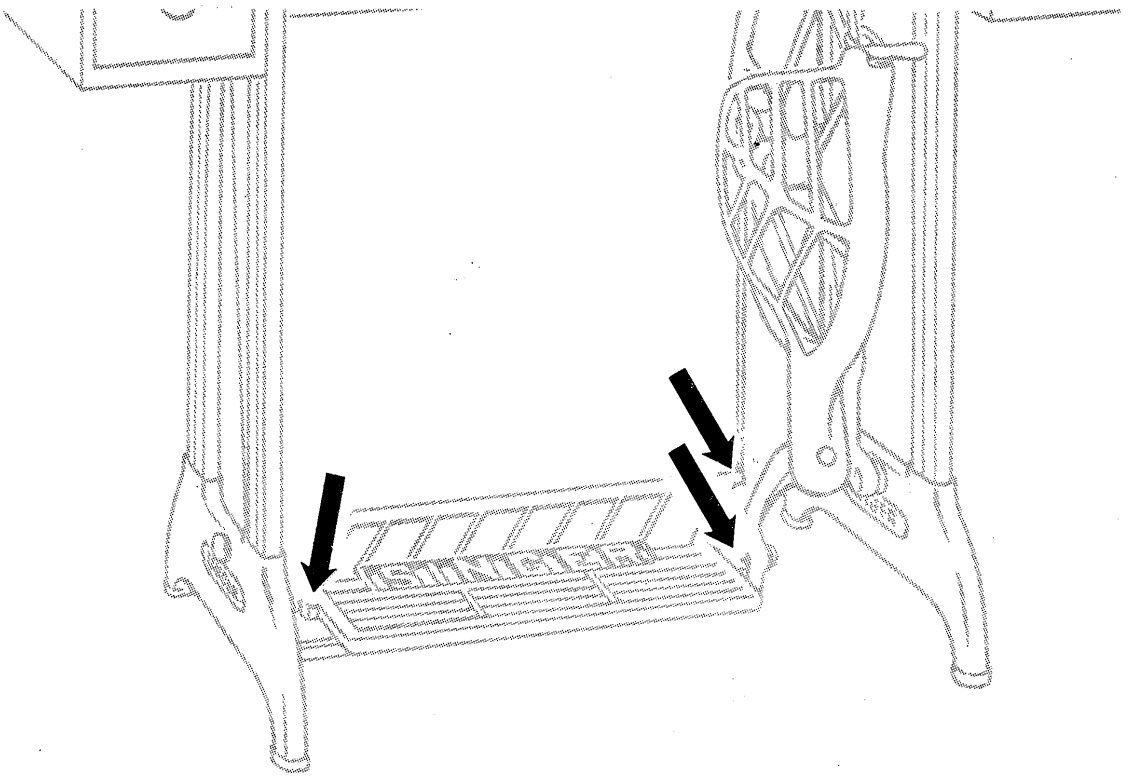

FIG. 63. OILING THE STAND.

NOTE.—The cleaning and oiling instructions given in this manual apply in general to all Singer sewing machines. You may find, however, that the oiling points on your machine differ from those illustrated. Detailed information on cleaning and oiling each type of machine is contained in the instruction book supplied with the machine.

To Remove Gummed Oil.

If the machine should run hard after it has been idle for some time, this is probably due to the oil in its bearings having become gummed. A little paraffin should then be applied at each oiling point and the machine run rapidly for a few minutes so as to dissolve the old oil, after which the machine should be thoroughly wiped with a duster or a piece of waste material. Singer Oil should afterwards be applied to all working parts. Whenever paraffin has been used, it is advisable to oil the machine a second time after a few hours' use.

If a machine should not run freely after treatment in this way, it should be examined by a skilled sewing machine mechanic.

COMMON CAUSES OF MACHINE TROUBLES.

Causes of Upper Thread Breaking.

Machine incorrectly threaded. (See instruction book).

Tensions too tight. (See pages 18-19).

Needle bent or having blunt point.

Needle too fine for size of thread and material to be sewn. (See needle table on page 11).

Burr on needle hole in throat plate (caused by needle striking the plate).

Burr on slot in presser foot (caused by sewing over pins or breaking needle).

Needle incorrectly set. (See page 13).

Take-up spring bent or broken.

Tension discs worn so that thread works in a groove.

Causes of Lower Thread Breaking.

Tension too tight. (See pages 18-19).

Thread wound unevenly on bobbin or bobbin wound too full. (See pages 8-10).

Spring on bobbin case or shuttle being worn.

To Avoid Breaking Needles.

Do not sew heavy seams with too fine a needle.

Use correct size of needle for thread and material to be sewn. (See needle table on page 11).

See that the presser foot or attachments are securely fastened to the presser bar and that the needle in its descent is central in the hole of the attachment and throat plate.

Do not attempt to pull or remove the material until the needle is above the work ; otherwise the needle may become bent and strike the throat plate when re-starting to sew.

Do not use a needle of any other make. Use only Singer needles, which are specially made for Singer Machines.

Do not leave pins in the material after basting.

Missing Stitches.

Needle not accurately set in the needle bar or being blunt or bent.

Needle too fine for thread used.

Stitches Looping.

Looped stitches are usually caused by the tension being too loose. See pages 18-19 for the regulation of tensions.

See that both the upper and lower threading are correct, that the thread is of good quality and the correct size for the needle.

Test both tensions and stitch on a piece of the material to be sewn.

Loop stitches are sometimes caused by the placing of the bobbin in the bobbin case or shuttle so that the thread pulls from the wrong side of the bobbin, or by the bobbin being wound too full.

Machine Not Feeding Correctly.

This is often caused by the pressure on the work being too light for the material. (See page 23).

The tensions may be too tight. (See pages 18-19).

The feed dog may be worn. This may be determined by running a finger over the teeth. If they are not sharp, the feed dog should be replaced by a competent mechanic.

The stitch regulator screw may have been adjusted too far, thus making the feed inoperative.

Puckered Seams.

Stitch too long for material being sewn, especially on fine material.

Tension too tight.

Machine Working Heavily.

If the machine works hard after standing it is probably gummed and needs a general cleaning. (See pages 24 to 29).

The belt may be too tight thus putting excessive pressure on the bearings. The belt should be just long enough to grip the hand wheel without slipping.

The bobbin winder may have been inadvertently snapped down into operative position, thus putting pressure on the hand wheel. In such case release the winder by pressing the lever located behind the bobbin spindle.

Noisy Treadle.

If the treadle is noisy, the screws on which it is pivoted need tightening. Release one of the screws by giving the nut one or two turns with a wrench. Then place a screw driver in the slot of the screw and advance the screw toward the treadle just enough to take up the play. Tighten the nut and test the treadle. If still noisy, repeat the operation at the other side.

BINDING WITHOUT BASTING.

Bindings of various materials may be applied with the Binder attachment supplied with Singer Family Sewing Machines. This attachment folds and guides the binding and, by a simple adjustment, the stitching can be regulated to come close to the edge of the binding.

The following pages give directions for using this time-saving attachment and suggest many ways in which binding may be applied to curves with perfect results.

How to Cut Material for Use with the Binder.

(Material used for binding must be cut on the bias).

The bias cutting gauge, shown in Fig. 64, is very useful for cutting bias strips to be used with the Binder attachment. Binding must be cut $\frac{7}{8}$″ wide if the material contains dressing, and about 1″ wide for soft material. The letter F shows the position at which to set the blue spring or indicator for Facings, B for Binding, and C for Cording or Piping. The blue spring A when set at B will cut material about $\frac{7}{8}$″ wide. The gauge has to be fitted to the pointed end of the scissors, as shown in Fig. 65, and the material is inserted up to the blue spring when cutting, as shown in Fig. 66.

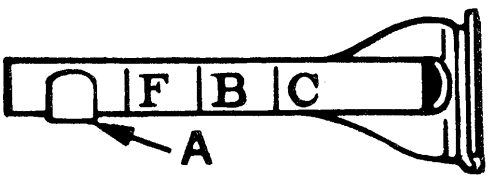

FIG. 64. THE BIAS CUTTING GAUGE.

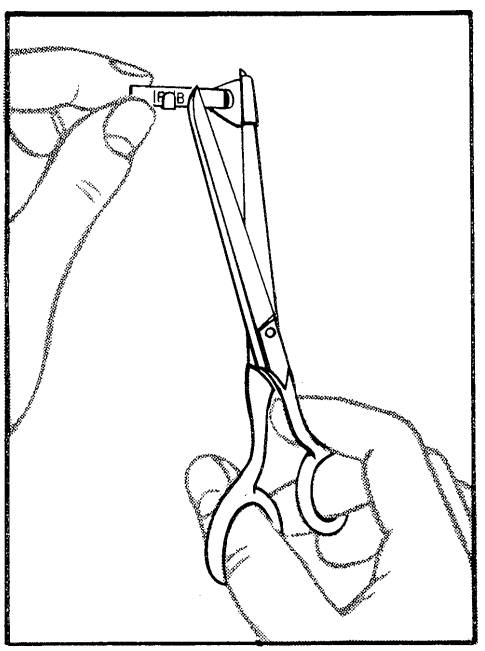

FIG. 65. ATTACHING BIAS GAUGE TO SCISSORS.

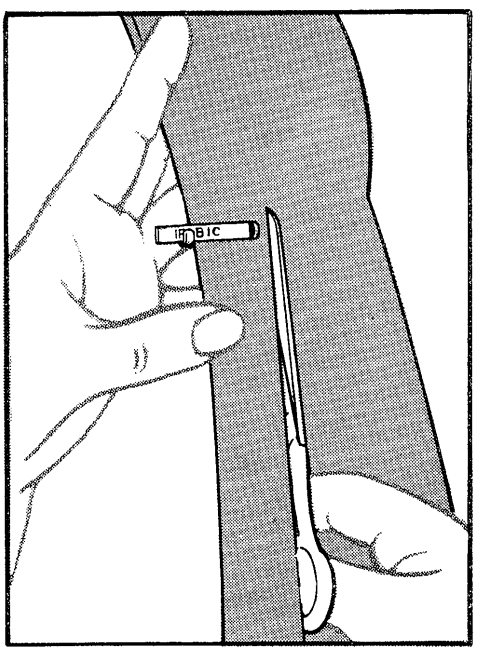

FIG. 66. CUTTING BIAS STRIPS.

Joining Bias Strips.

One yard of material 36 inches wide is sufficient for about 30 yards of bias strips $\frac{7}{8}$″ wide. It is usually an economy to purchase this quantity and to save the surplus for future use.

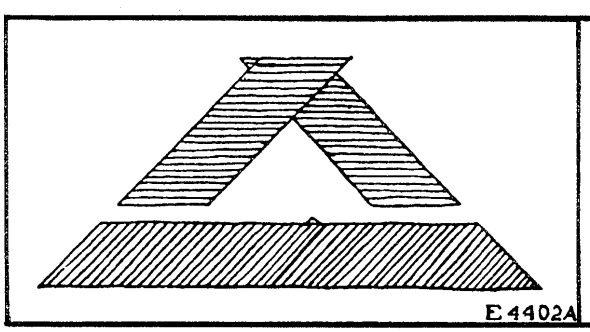

FIG. 67. THE RIGHT WAY TO JOIN STRIPS.

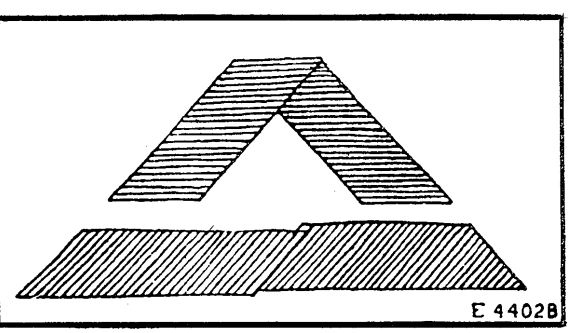

FIG. 68. THE WRONG WAY TO JOIN STRIPS.

Cut the strips, lay the two diagonal ends as shown in Fig. 67, and stitch them together. The stitching should be as close to the edge as possible so that the seam passes through the Binder freely. When the strips are straightened out, as shown in Fig. 67, the edges are exactly even. Do not join the strips as shown in Fig. 68, as the edges would be uneven when straightened out. It is advisable to press the seams open with an iron, and if the strips are not to be used immediately they should be wound on a piece of cardboard to keep them from stretching.

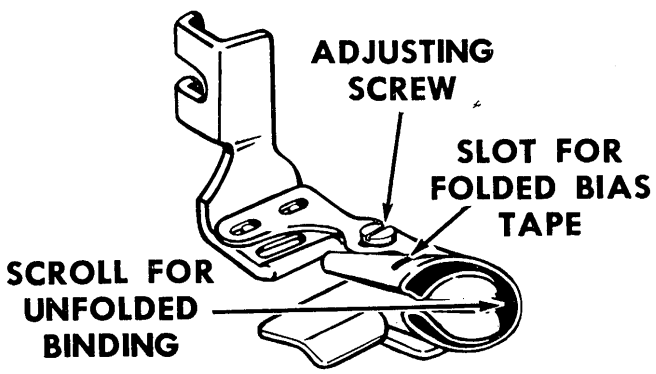

FIG. 69. THE BINDER.

To Attach the Binder to the Machine.

Raise the needle bar to the highest point and remove the presser foot from the machine by loosening the thumb screw which holds it in position. Then fit the binder, Fig. 69, in its place and turn the hand wheel slowly towards you to make sure that the Binder is correctly attached to the presser bar ; also see that the needle passes through the centre of the needle hole in the attachment.

To Insert the Binding in the Binder.

Fold the binding in the centre and cut to a point, as shown in Fig. 67. Insert the pointed end into the binder scroll (see Fig. 71), until it comes out at the lower end.

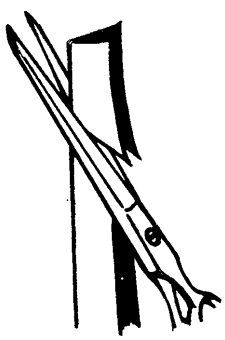

FIG. 70. CUTTING POINT ON BINDING.

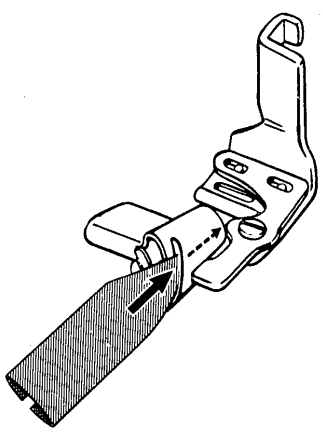

FIG. 71. INSERTING BINDING IN BINDER.

Now place the edge of the material to be bound between the scroll of the binder and pass it and the binding under the presser foot of the binder, then lower the presser bar and start to sew. You will notice that as the binding passes through the scroll of the binder the edges are turned in.

Bias binding in a variety of colours, cut and folded ready for use with the Binder, may be purchased at Singer Shops.

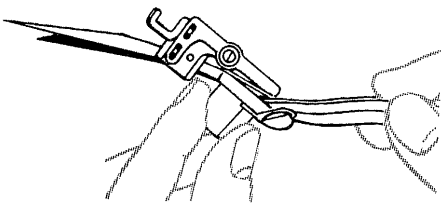

FIG. 72. INSERTING FOLDED BINDING IN OUTSIDE SLOT.

Folded binding should be inserted in the outside slot of the Binder, as shown in Fig. 72. The Binder is adjusted and operated in the same manner as when using unfolded binding. One-half inch braid or ribbon, having a finished edge, may also be used in the same manner, because binding passing through the outer slot is turned only once by the attachment.

The Adjustment and Operation of the Binder.

The edge of the material to be bound should be held well within the centre slot of the scroll. If the material is allowed to slip away from the scroll when near the needle, the edge will not be caught in the binding. With a little practice it is quite easy to hold the edge in the scroll.

Various materials and conditions require different adjustments of the Binder to bring the stitching close to the edge. A wider adjustment of the Binder is required when binding curves than is necessary when binding a straight edge.

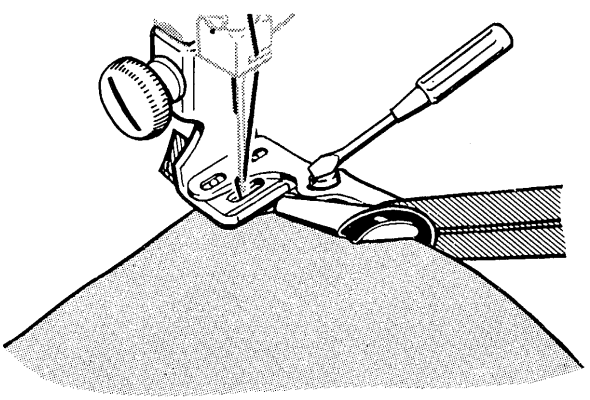

FIG. 73. ADJUSTING THE BINDER.

To adjust the Binder, for the stitching to be at the desired distance from the edge of the binding, loosen screw, as shown in Fig. 73, and move the scroll to the right for a narrower adjustment and to the left for a wider adjustment. Care should be taken to see that the screw is well tightened after making an adjustment. To become perfectly familiar with the adjustment of the Binder, practice is necessary.

Binding Outside Curves.

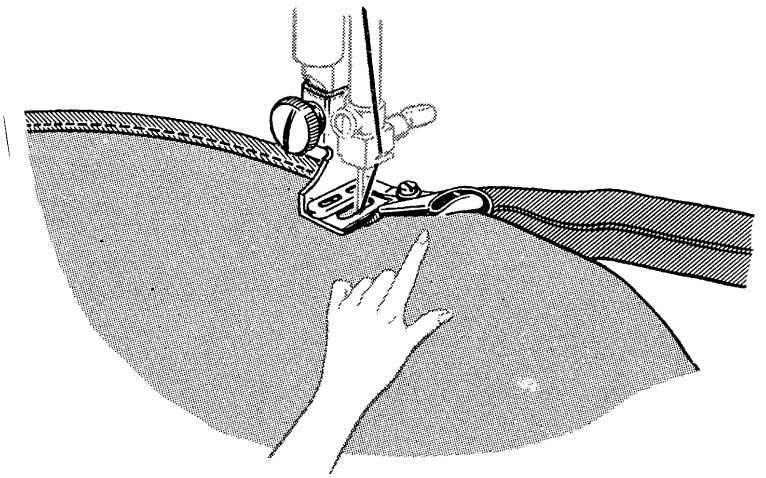

Practice is required to bind a curved edge properly. The edge to be bound must be held well within the scroll of the Binder in order to make a strong seam and so that the edge will not pull out.

FIG. 72. BINDING AN OUTSIDE CURVE.

Turn the material only as fast as the machine sews. It is not possible to hold the material in the entire length of the scroll when binding a small curve.

Do not push the material in too fast, as the edge will then become puckered, and do not stretch the material or the curve will not be the proper shape when finished. If the stitching does not catch the edge of the binding the scroll should be adjusted a trifle to the left.

Never pull the binding as it feeds through the Binder, as bias material is very easily stretched and will be too narrow when it reaches the needle. When this occurs the edges will not be turned.

Binding Inside Curves.

It will be necessary to practise binding an inside curve on various kinds of material, as this curve is found on nearly all garments which may be finished with a bound edge.

When binding an inside curve with the Binder, straighten out the edge as it is being fed into the attachment. When doing this, care should be taken not to stretch the edge of the material.

If the material is soft, like batiste or crepe de chine, add a row of machine stitching close to the edge of the curve before binding.

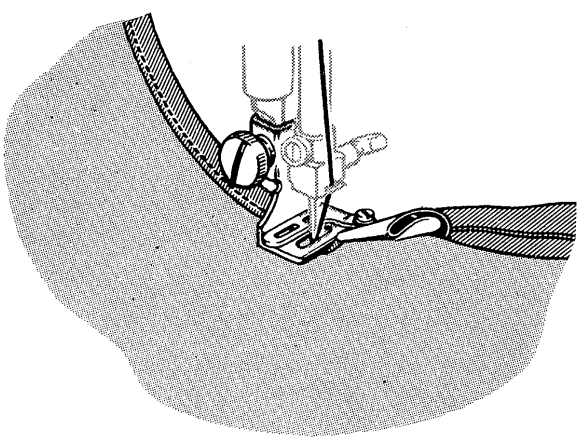

FIG. 73. SAMPLE OF INSIDE CURVE.

Applying a French Fold to a Curve.

A French fold is applied by placing the material under the attachment and stitching the binding in position, as shown in Fig. 74. A line made by basting or with chalk or pencil may be used as a guide in applying rows where wanted.

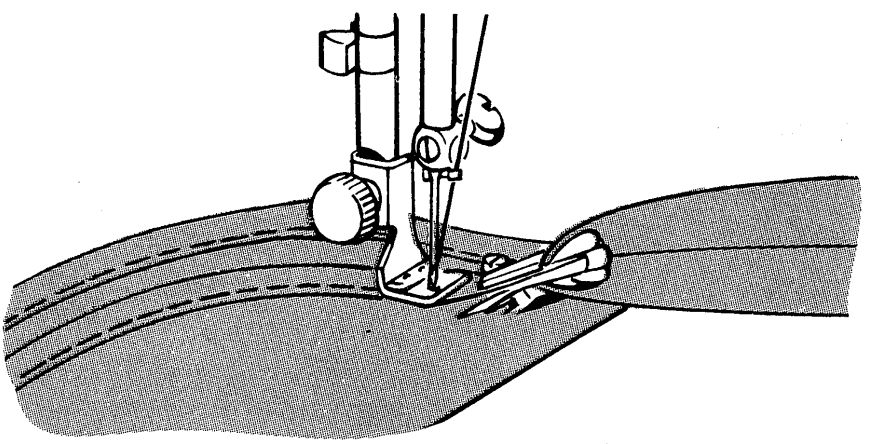

FIG. 74. APPLYING FRENCH FOLDS.

Binding a Square Corner.

To bind a square corner, apply the binding along one side to within $\frac{1}{8}''$ of the edge of the material, stopping the machine with the needle and take-up at the highest point. Then draw the material back away from the needle far enough to pull about two inches of the binding through the Binder. Fold and crease the binding to a square mitred corner, turn the

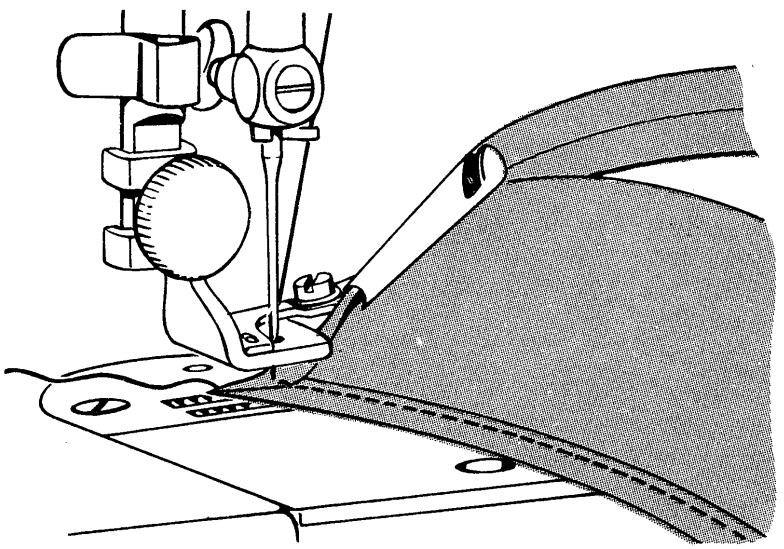

FIG. 75. TURNING A SQUARE CORNER.

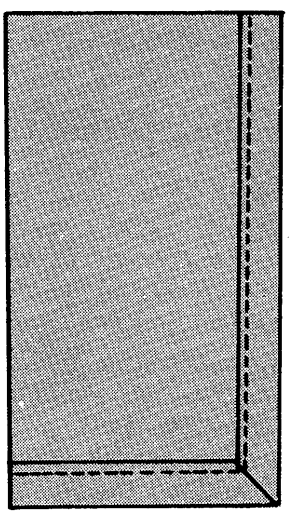

FIG. 76. SAMPLE OF SQUARE CORNER.

material and draw it back into the Binder, bringing the needle down through the binding close to the corner, as shown in Fig. 75. Draw the slack thread back through the needle and tension. Be sure the new edge of the material is properly placed in the scroll of the Binder and begin stitching slowly until you are sure the material is feeding properly. The loop of the thread on the underside at the corner may be tied or cut off without fear of ravelling, as the stitch is locked.

Binding Plackets.

To bind a placket, first fold the material in a straight line, as shown in Fig. 74, placing the fullness in a flat fold on the under side of the material.

Insert the edge of the placket in the Binder and stitch the binding on as usual. Run the machine slowly as the point is reached and take care that

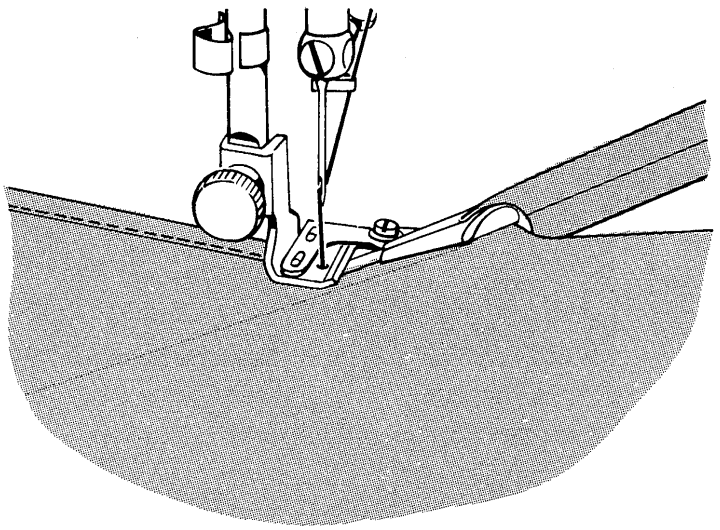

FIG. 74. BINDING A PLACKET.

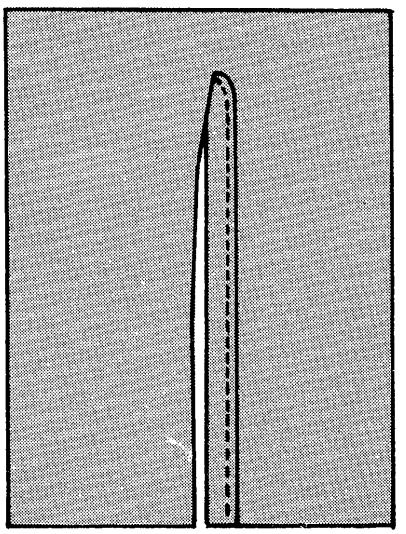

FIG. 75. SAMPLE OF BOUND PLACKET

too much material is not allowed to feed into the Binder. As soon as you have reached the point of the placket, fold the material to the other side of the slit and bind to the end.

For practice, cut a slit about 5 inches deep in muslin and learn to fold it in a straight line before starting to bind. When you have mastered the placket you will find it quite easy to bind scallops.

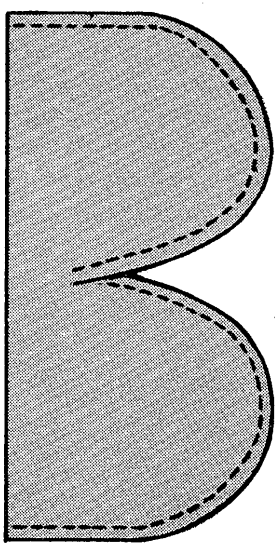

FIG. 76. SAMPLE OF BOUND SCALLOPS.

Bound Scallops.

The point at the top of the scallop is bound in exactly the same manner as the placket. Practice the binding of a small single scallop first before attempting to bind a row of scallops.

If the material is soft and liable to stretch, add a row of machine stitching close to the edge of the scallop before starting to bind the edge.

Applying Military Braid with the Binder.

Military braid $\frac{1}{2}''$ in width may be used in the Binder by inserting it in the outside slot of the scroll. (See directions for using **folded** binding on pages **33** and **34**).

This braid makes a suitable trimming for serge or other woollen material and, when applied with the Binder, has a neat tailored appearance impossible to obtain by hand sewing.

Both inside and outside curves may be bound with perfect ease after the Binder has been properly adjusted.

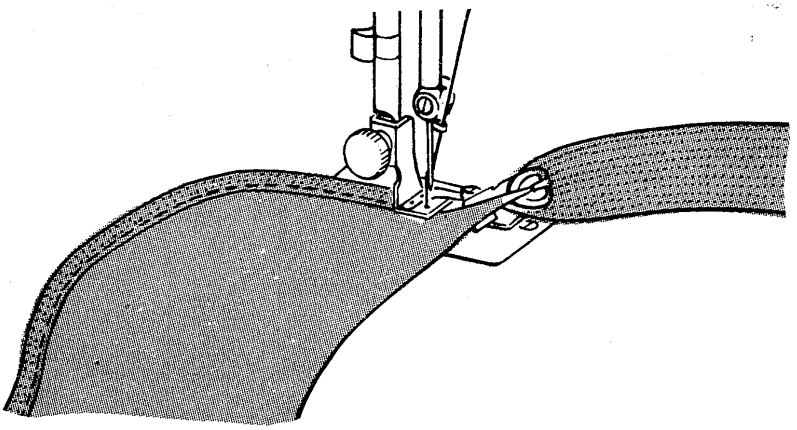

FIG. 77. BINDING WITH MILITARY BRAID.

Making Button Loops with the Binder.

To make button loops, first stitch together a piece of binding of the desired material and length by using the Binder. You will then have a quarter-inch fold with the edges stitched together. Cut a strip of binding long enough to make a loop of the desired size and fold it to a point, as shown in Fig. 78. Fasten the loop at the point with a hand sewing needle.

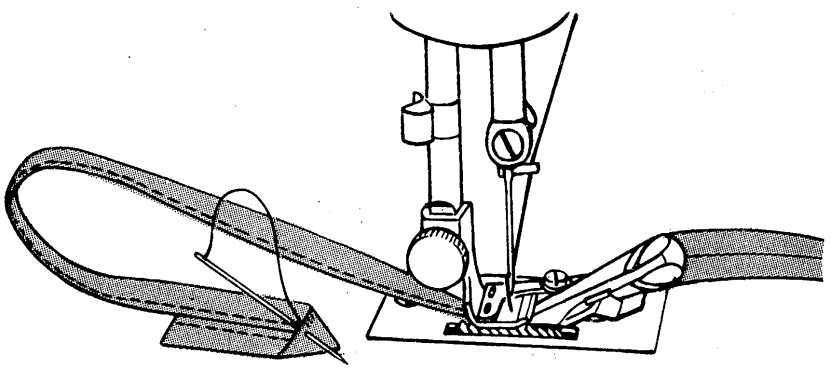

FIG. 78. MAKING BUTTON LOOPS.

These loops are most attractive when made of silk material or military braid and may be applied in various ways to the frock or blouse.

Bound Buttonholes Made with the Binder.

Take a strip of material as wide as you wish to make your buttonholes apart and bind each side. For example, if you wish to make your buttonholes

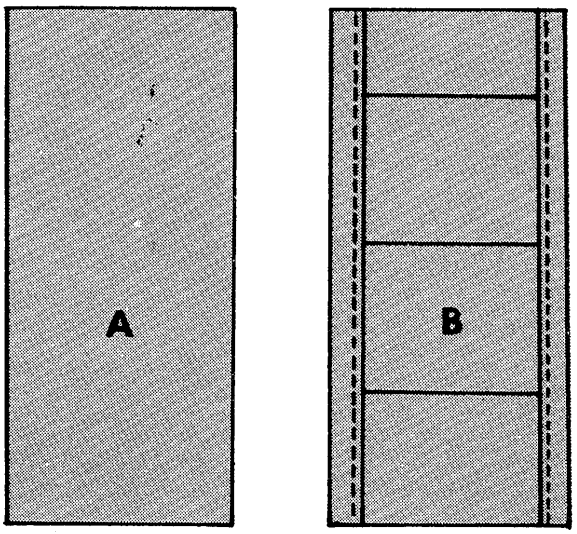

FIG. 79. STARTING BOUND BUTTONHOLES.

two inches apart, take a two-inch strip of material, as shown in Fig. 79, at A, and bind each side, as shown at B.

Measure the diameter of the button you wish to use and cut the bound strip into pieces one-half inch greater than the width of the button. (See Figs. 79-B and 80). After the strip is cut into sections, bind them together so that the bound edges just meet, as shown in Fig. 80. Having bound one edge, as shown in Fig. 80, proceed to bind the other edge, first placing the edge of the garment even with the strip of buttonholes, so that both are bound at one stitching. (See Fig. 81). Then open out the strip of buttonholes beyond the material and stitch down the upstanding edge of the binding to the garment.

If an extra-strong buttonhole is desired, a linen tape may be used for the binding. This must, however, be one-half inch in width and be used in the outside slot of the Binder.

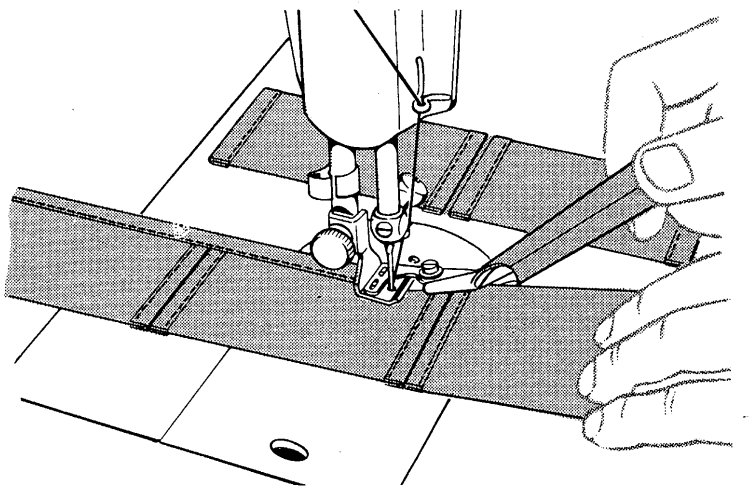

FIG. 80. BINDING PIECES TOGETHER.

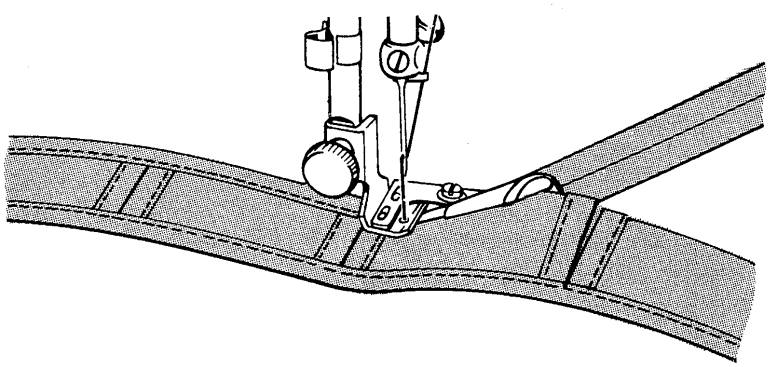

FIG. 81. COMPLETING BOUND BUTTONHOLES.

Making Cut-in Buttonholes with the Binder.

The cut-in buttonhole is made in the same way as the placket. Cut a slot in the edge of the material to the depth you wish to make the buttonhole and shape it, as shown in Fig. 82 at A. Fold the material in the same manner as in binding a placket. (See Fig. 74). Trim off the edge of the binding, as shown in Fig. 82 at B, and bind the edge with the Binder, as shown at C.

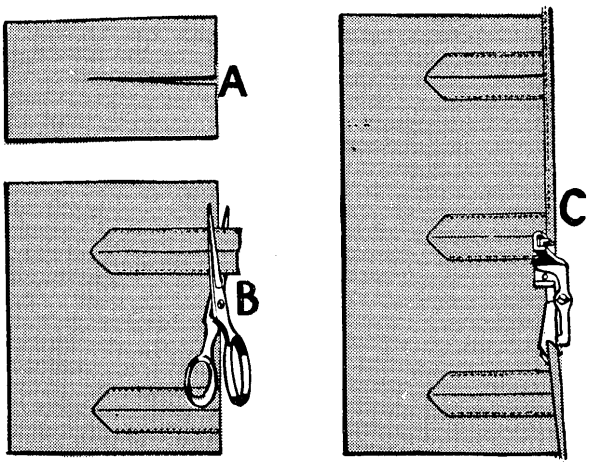

FIG. 82. CUT-IN BUTTONHOLES.

THE BLIND STITCHER.

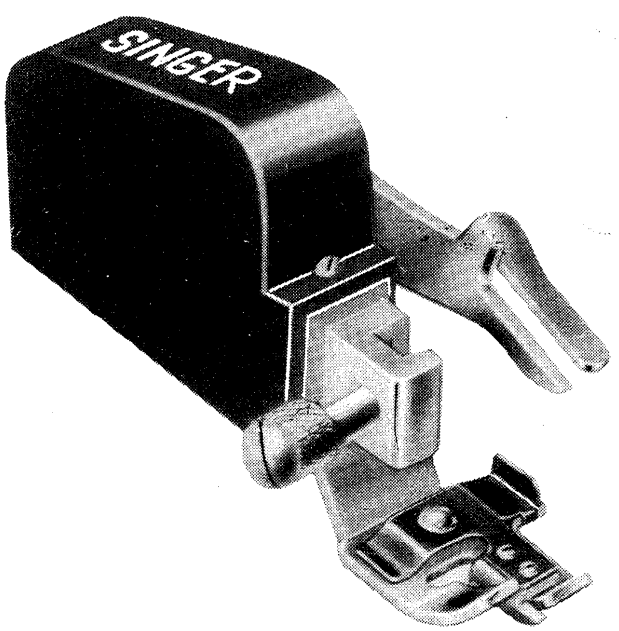

FIG. 83. THE BLIND STITCHER.

This useful SINGER attachment produces invisible hemming with perfect blind stitches on an almost unlimited variety of work such as skirts, dresses, lingerie, children's clothes, towels, curtains, sheets, table cloths and many other articles.

It is quickly attached to your sewing machine in place of the presser foot. It is easy to use and will enable you to accomplish superior invisible hemming much faster and with less effort than is possible by hand.

THE BUTTONHOLER

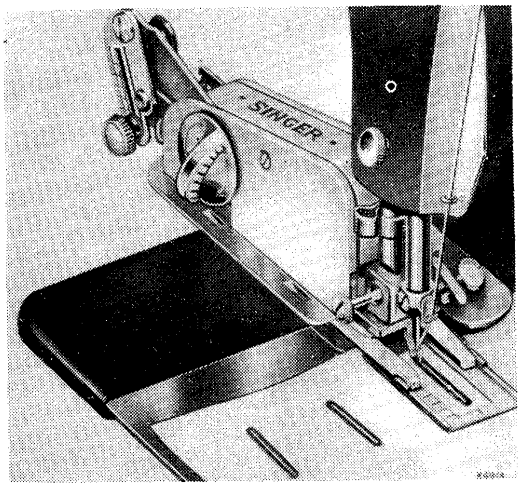

FIG. 84. THE BUTTONHOLER.

This attachment produces neat and durable buttonholes in a great variety of fabrics without any special skill on the part of the operator. The buttonholes are produced in a fraction of the time required for hand work and they are firmer and more even than those made by hand.

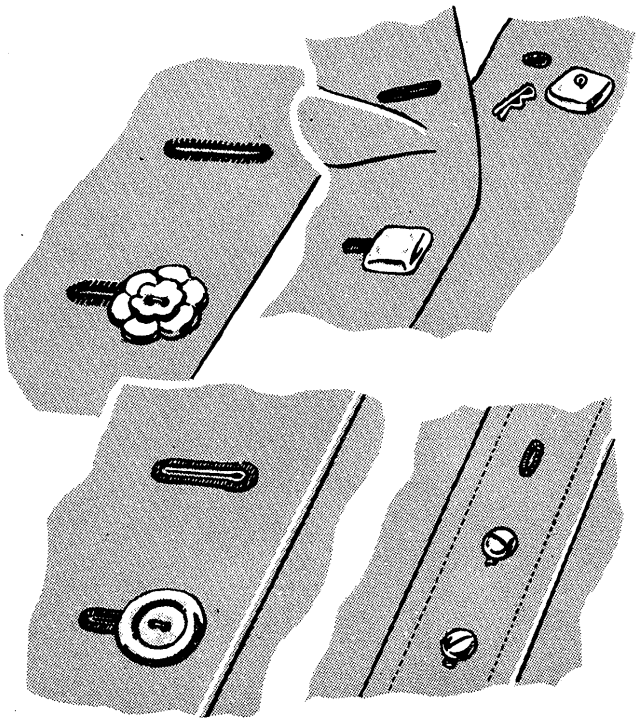

FIG. 85.

THE FOOT HEMMER AND THE ADJUSTABLE HEMMER.

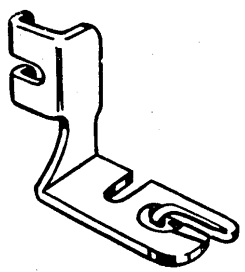

FIG. 86. THE FOOT HEMMER.

The Foot Hemmer.

Raise the needle bar to the highest point and loosen the thumb screw which clamps the presser foot to the presser bar. Remove the presser foot and substitute the hemmer foot, taking care to tighten the screw firmly so that the Hemmer will not become loose when the machine is running. Turn the hand wheel slowly toward you to make sure that the needle goes through the centre of the needle hole and that the lower thread is properly pulled up.

How to Start the Hem at the Very Edge.

How to start the hem at the very edge of the material is of great importance in learning to use the Hemmer. If the hem is not started at the edge, and the material is pulled bias, a perfect hem cannot be made.

There are several ways of starting the hem at the edge, but the most practical one is as follows :

1. Fold over about $\frac{1}{16}''$ of the edge of the material at the starting point for a distance of about one inch.

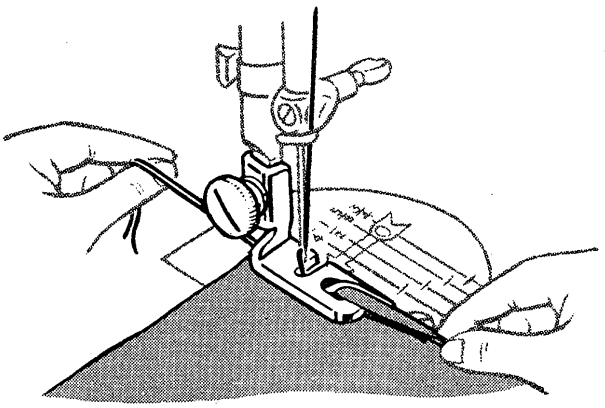

FIG. 87. STARTING A HEM AT THE EDGE.

2. Place the material in the Hemmer at a point just beyond the fold, as shown in Fig. 87.

3. Draw the material towards you through the Hemmer, at the same time making the second fold at the very edge. Continue to draw the material through the Hemmer until the edge is just under the needle. Place the upper and lower threads together under the Hemmer foot and assist the starting of the hem by slightly pulling the threads from the back after the first stitch has been made.

Making a Hem with the Foot Hemmer.

The same width of material must be kept in the Hemmer at all times. Guide the material with the thumb and forefinger of the right hand, so that the edge lies flat over the top of the Hemmer, and proceed to sew, taking care to keep the Hemmer curl just full. Should the edge begin to run out, move the hand to the left; should too much material run in, move to the right. (See Fig. 88).

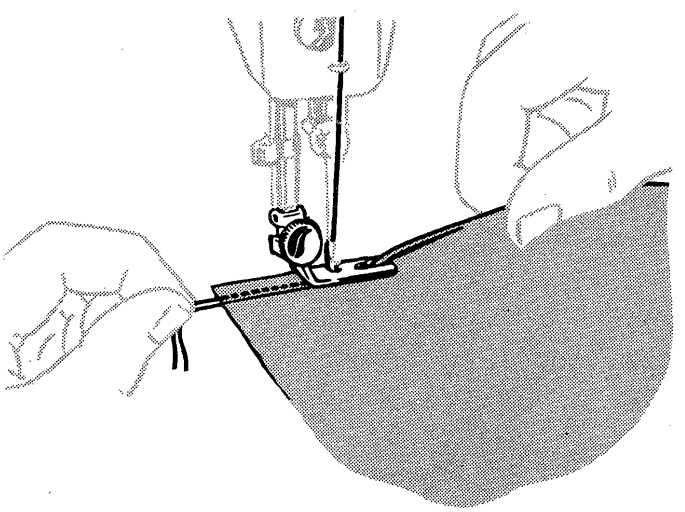

FIG. 88. MAKING A HEM WITH THE FOOT HEMMER.

Making a Hemmed Seam with the Foot Hemmer.

The hemmed seam is very practical to use on underwear, or in fact on any garment where a straight seam is used and where a small double seam would be suitable.

When using this seam the garment must be first fitted and the edge of the material trimmed, allowing for about one-eighth inch seam. The two edges are placed together and inserted in the Hemmer in the same manner as a single hem. If the material is bulky, the edge of the upper piece of material may be placed about one-eighth inch in from the edge of the lower piece. (See Fig.89).

The free edge of a hemmed seam may be stitched flat to the garment, if desired. First open the work out flat, then place the hem in the scroll of the Hemmer, which acts as a guide, holding the edge of the hem in position while it is being stitched.

If the seam is stitched flat to the garment one row of stitching is visible on the right side.

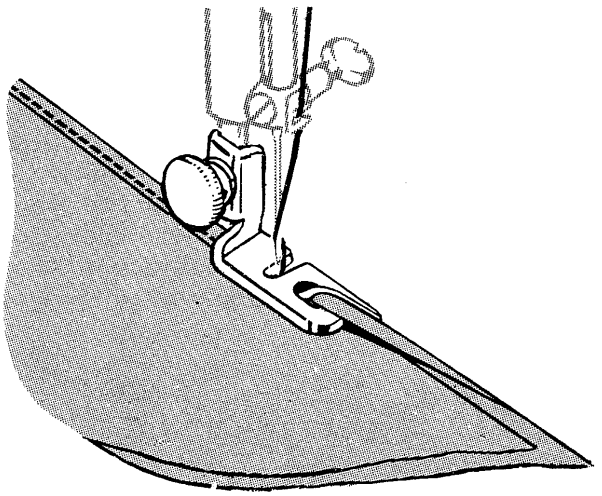

FIG. 89. MAKING A HEMMED SEAM.

The hemmed seam may be used on muslin, lawn, organdie, or other fine materials where a narrow seam is desirable.

Hemming and Sewing On Lace at One Operation.

Start the hem in the usual way and, with the needle holding the hem in position, raise the presser bar sufficiently to allow the edge of the lace to be slipped in under the Foot Hemmer, at the same time bringing it up through the slot at the right of the Hemmer. (See Fig. 90). Lower the bar, turn the hand wheel and catch the edge of the lace with the needle. Guide the hem with the right hand and the lace with the left. Care should be taken not to stretch the lace as it is being fed into the Hemmer.

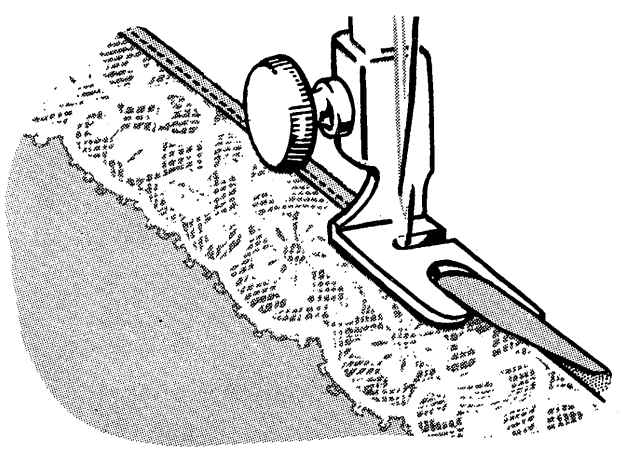

FIG. 90. HEMMING AND SEWING ON LACE.

It is not practical to sew gathered lace on with the Foot Hemmer, as the fulled lace catches in the Hemmer slot.

A very attractive way of applying lace so that the stitching of the hem is not visible is to start the hem in the usual way, slipping the lace in from the left as you would the second piece of material when making a hemmed seam.

Hemming Fine Materials with the Foot Hemmer.

When hemming fine materials, such as georgette or crepe de chine, with the Foot Hemmer, the material will not feed through properly and the stitch will be very much shorter than when sewing with the presser foot on the same material.

To overcome this difficulty, and to assist in holding soft materials so that they will be turned properly with the Foot Hemmer, insert a piece of paper under the material between the feed and the foot of the Hemmer and allow it to feed through with the material. Strips of thin paper or the edges of newspapers are very convenient for stitching. Never use tissue paper as this will be very difficult to pull away from the material.

Hemming a Curved or Bias Edge.

A curved or bias edge may be hemmed with the Foot Hemmer by inserting paper under the Hemmer. The paper takes up the fullness in the material and with a little care in guiding, a curve, such as would be used on men's shirts or the edge of an apron, may be perfectly hemmed.

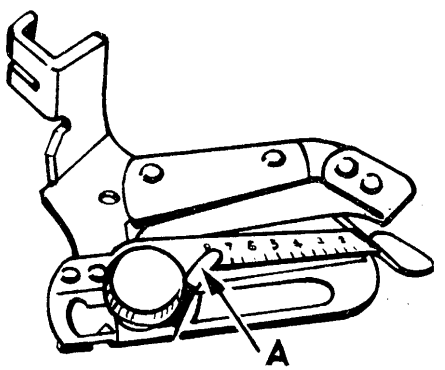

FIG. 91. THE ADJUSTABLE HEMMER.

The Adjustable Hemmer.

The Adjustable Hemmer (Fig. 91) will make a hem of any desired width up to one inch. For making wider hems see page 46.

Remove the presser foot and attach the Hemmer to the presser bar, taking care that the needle descends in the centre of the needle hole after you tighten the thumb screw.

How to Adjust the Hemmer for Hems of Various Widths.

To adjust the Hemmer, loosen the screw and you will then be able to move the hemmer guide to the right or to the left. Note the pointer (A, Fig. 91) which is used with the scale of figures on the Adjustable Hemmer.

The Hemmer may be adjusted as follows :

Pointer set at :

1—for $\frac{1}{8}''$ hem (approximate)	5—for $\frac{5}{8}''$ hem (approximate)
2— " $\frac{1}{4}''$ " (")	6— " $\frac{3}{4}''$ " (")
3— " $\frac{3}{8}''$ " (")	7— " $\frac{7}{8}''$ " (")
4— " $\frac{1}{2}''$ " (")	8— " $1''$ " (")

After setting the Hemmer, care should be taken to see that the adjusting screw is well tightened before starting to sew.

How to Insert the Material in the Adjustable Hemmer.

Fold over the edge at the end of the material to be hemmed, as instructed for starting a hem with the Foot Hemmer. Place the material in the Hemmer under the scale and draw it backwards and forwards until the hem is formed.

You will then be able to determine the width and to fold over the end of the hem for the second turning. Draw the material back until the end comes directly under the needle.

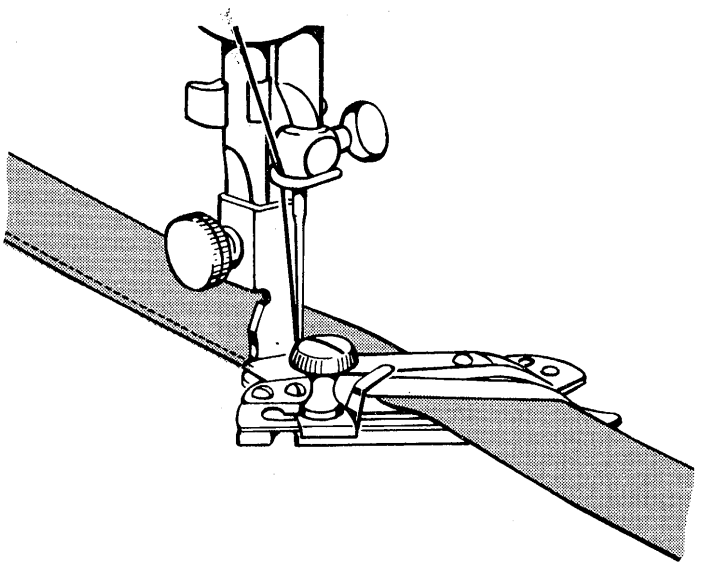

FIG. 92. HEMMING WITH THE ADJUSTABLE HEMMER.

Lower the presser bar and sew, guiding sufficient material in the Hemmer to turn the hem properly. (See Fig. 92).

If the hem is not started at the edge it will run bias and not come out even at the other end.

It is well to practise the use of this attachment with striped material. When you are able to match each stripe exactly you are prepared to hem a garment properly.

Hemming Soft Material.

When hemming soft material liable to stretch, it is well to slip a piece of paper under the Hemmer next to the feed. This will prevent the material from stretching and assist in turning the hem.

How to Prepare a Hem on Table Linen.

Much time is spent in turning the hem of table linen to make it ready for hand sewing. The Hemmer is very valuable for this operation. Set the Hemmer for the desired width of hem, take the thread from the needle, and run the linen through the Hemmer.

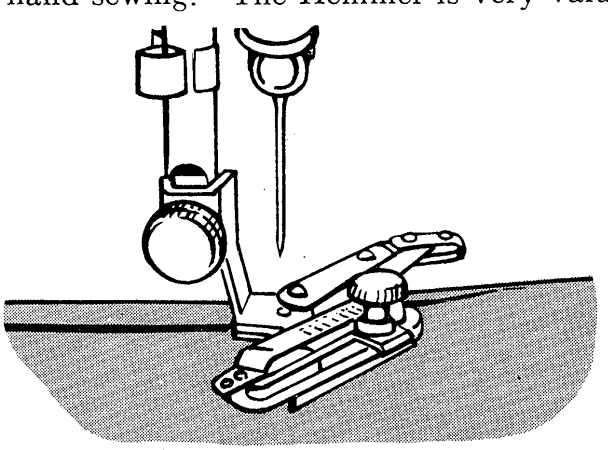

FIG. 93. PREPARING A HEM ON TABLE LINEN.

You will find that the hem has been evenly turned, ready for the hand sewing and the holes made by the machine needle have softened the linen, making it quite easy to do the hand work. (See Fig. 93).

Table linen or other material may be prepared for hemstitching in this manner.

Making a Wide Hem with the Adjustable Hemmer.

To make a hem more than 1″ wide, loosen the thumb screw and draw the slide to the right as far as it will go, then turn this part towards you, as shown in Fig. 94.

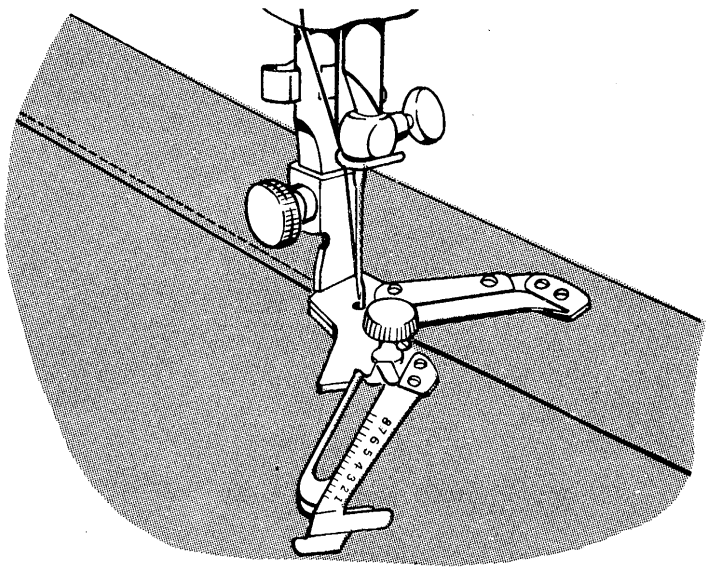

FIG. 94. HEMMER ADJUSTED FOR WIDE HEMMING.

Fold and crease down a hem of the desired width, pass the fold under the extension at the right of the hemmer, insert the edge of the material into the folder, as shown, and proceed to stitch.

The hemmer will turn the edge and stitch it flat, but the operator must keep the crease for the width of the hem even as the machine sews. Hems may be applied to sheets or other similar articles in this manner.

THE PRACTICAL USE OF THE TUCKER.

Tucking is the natural trimming for fine materials, such as lawn, organdie, batiste, etc., and, when using the Singer Tucker, may be made in any width, without basting, from a fine pin tuck to one inch wide. The Tucker gauges the width of the tuck and, while one tuck is being stitched, it marks the material for the next tuck to be made.

Tucks are made so easily in this way that it is a joy to make garments with this fascinating trimming. Then, too, such trimmings may be made without extra cost. The fashion magazines give numerous suggestions for tucking various garments. The following pages will explain the adjusting and operating of this time-saving attachment.

The Parts of the Tucker and Their Uses.

Note the names and uses of the various parts of the Tucker, Fig. 95, as follows :

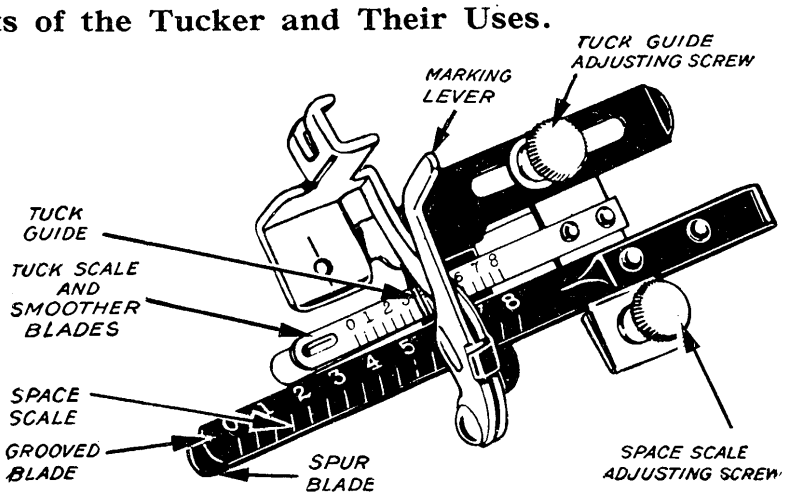

FIG. 95. THE TUCKER AND ITS WORKING PARTS.

The Tuck Guide, which is adjustable and may be set for any desired width of tuck.

The Tuck Scale, containing figures which indicate different widths of tucks. The tuck scale also acts as a smoothing blade, keeping the tucks of uniform width.

The Tuck Guide Adjusting Screw, by means of which the tuck guide may be set at any point on the tuck scale.

The Spacing Scale, contains figures on the upper blade which indicate the width of the space between tucks. The middle or **grooved blade** contains a groove into which the material is pressed by the **spur** at the end of the lower or **spur blade,** thus marking the goods for the folding of the next tuck.

The Spacing Scale Adjusting Screw, by means of which the space scale may be set at any desired point.

The Marking Lever, which presses on the grooved blade, marks the material as it passes between the grooved and spur blades.

A careful study of the Tucker parts, and their relation to each other, before using this attachment, will make its operations quite clear.

To Attach the Tucker to the Machine.

Raise the needle bar to the highest point, remove the presser foot from the machine and attach the Tucker in its place. Care should be taken to see that the Tucker is securely fastened to the presser bar and that the needle goes through the centre of the needle hole. Note the position of the marking lever, making sure that it is in the lower position and that the needle clamp works on it as the machine sews.

How to Adjust the Scales on the Tucker.

The width of the tucks and the space between them is determined by the adjustment of the scales. Adjustment for width of tuck is made by loosening the tuck guide adjusting screw, which allows you to move the tuck guide to the desired figure on the tuck scale. The tuck guide should be set just over the figure you wish to use. The adjusting screw should always be well tightened.

The figures on the tuck scale indicate the width of tuck in eighths of an inch, the marks between figures are sixteenths.

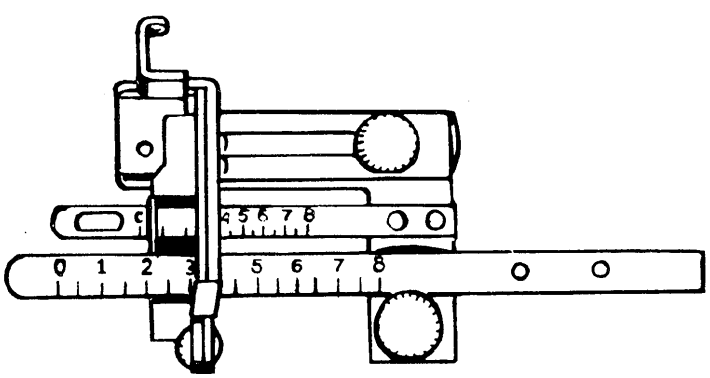

FIG. 96. TUCKER SET AT PIN TUCK AND 2 SPACE.

To adjust for the width of space between the tucks, loosen the space scale adjusting screw and move the space scale until the desired figure is directly in line with the centre of the needle hole. You will find a line front and back of the needle hole to indicate the centre.

Before starting to sew, tighten the screw well to prevent the scale shifting when the Tucker is in operation.

The marks on the space scale are double the width of those on the tuck scale, so that when both scales are set at the same figure, blind tucks without spaces between them are made.

To make space between tucks, first set the tuck scale, then move the space scale to the same number and as much further to the left as you wish to have space. Each number on the space scale represents one-quarter of an inch and each mark between numbers one-eighth of an inch.

Use the table below to assist you in setting the Tucker.

	Tuck Guide	Space Scale
$\frac{1}{8}''$ tucks with no space	1	1
$\frac{1}{8}''$ " " $\frac{1}{8}''$ "	1	$1\frac{1}{2}$
$\frac{1}{4}''$ " " no "	2	2
$\frac{1}{4}''$ " " $\frac{1}{4}''$ "	2	3
$\frac{1}{2}''$ " " no "	4	4
$\frac{1}{2}''$ " " $\frac{1}{2}''$ "	4	6
$1''$ " " no "	8	8

Note Fig. 96, showing Tucker set at a pin tuck and 2 for space.

Where to Insert the Material to be Tucked.

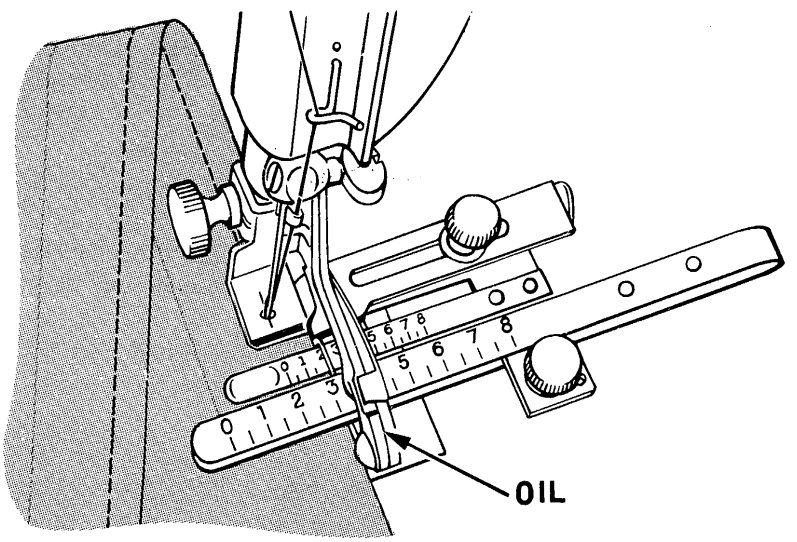

FIG. 97. PROPER POSITION OF MATERIAL IN TUCKER.

Fold and crease the first tuck for its entire length by hand, insert it in the Tucker from the left, placing it between the grooved blade and the spur blade of the space scale, and between the two blades of the tuck scale. (See Fig. 97).

Care should be taken to see that the material is placed far enough in the Tucker to feed against the tuck guide. Draw the material towards you until the edge is directly under the needle. Lower the presser bar and sew. You will note that the Tucker is now making a mark for the next tuck.

Fold the material at the crease and, with its plain side uppermost, proceed as before. When making the last tuck, raise the marking lever so that it does not press on the double flat spring ; while it is in this position no crease for a succeeding tuck can be made in the material.

How to Tuck Silk or Chiffon.

It is possible to tuck silks, such as taffeta, quite as easily as cotton material. Soft materials such as crepe de chine and georgette, are harder to crease, but may be tucked successfullly if a piece of paper is slipped under the Tucker. It is very necessary that the tensions be properly adjusted before starting to tuck fine materials, as a tight tension will pucker the material and cause the thread to break when the tuck is pressed.

How to Make Fine Tucks and Cross Tucking.

When making fine tucks it is necessary to use thread of the proper size to suit the material to be tucked. A fine needle, fine thread and a short stitch are the secrets of attractive tucking. Some ready-made garments trimmed with tucking are unattractive because the thread and stitches are too coarse.

Always test your tensions on a piece of the material you wish to tuck, and be sure they are properly adjusted before tucking a garment.

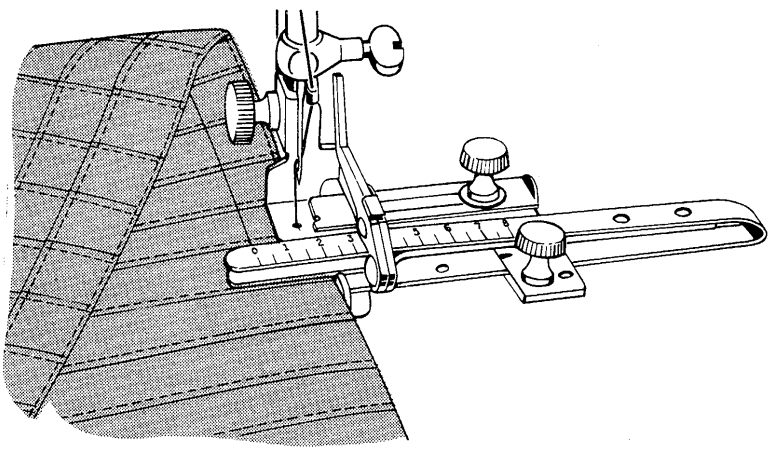

FIG. 98. CROSS TUCKING.

When making cross tucking, first decide on the combination of tuck and space you wish to use, and set the Tucker accordingly. Tuck the entire piece of material lengthwise, then crosswise over the tucks. (See Fig. 98). Care should be taken to see that the tucks lie in the proper direction before starting to cross the tucks. To prevent the material from becoming bias as it is tucked, it is well to press the tucks with an iron before the cross tucks are made.

Attractive cross tucking may also be made by first tucking the material lengthwise and then bias across the tucks.

THE MANY PRACTICAL USES OF THE RUFFLER.

For centuries past ruffling has played an important part in trimming garments, but the modern way to make and apply these trimmings is quite different from the methods used in earlier days. The Singer Ruffler for Singer Family Sewing Machines will make ruffles of any desired fullness at a speed of ten yards in ten minutes, and by a simple adjustment the ruffles may be changed to dainty plaits. This attachment is a wonderful time saver when making trimmings, and is so simple to use that by carefully following the directions given in this book, perfect results may be obtained.

The Parts of the Ruffler and Their Uses.

It is necessary to become familiar with the Ruffler before it can be used successfully. Take the Ruffler from the set of attachments and compare it with Fig. 99. Note the names and uses of the principal parts, as under :

The Ruffler can be used on all Straight Needle domestic sewing machines and is attached in place of the presser foot. The needle is threaded in the manner described in the instruction book supplied with the machine.

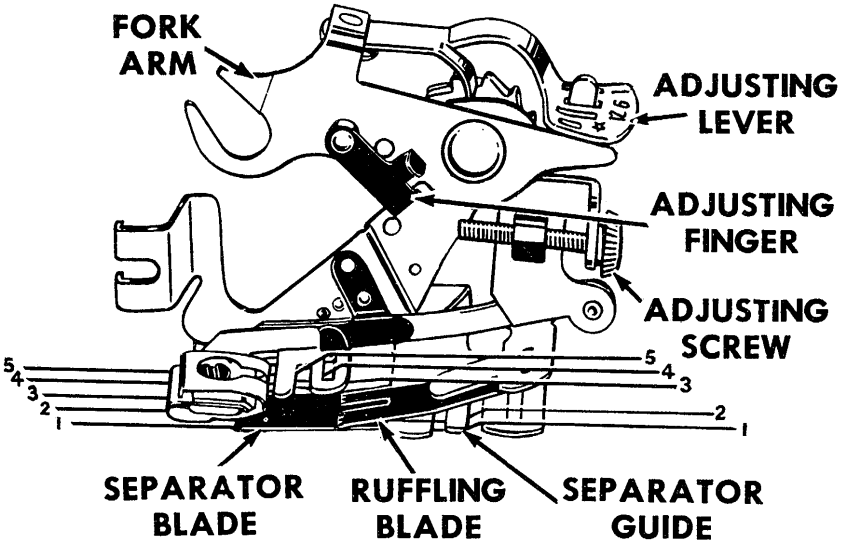

FIG. 99. THE RUFFLER AND ITS PARTS.

Note : If your Ruffler is not exactly like Fig. 99, you will find the working parts quite similar. Any difference in the adjustments is explained in the instruction book.

The Foot—the part by which the Ruffler is attached to the presser bar.

The Fork Arm—the section which must be placed astride the needle clamp.

The Adjusting Screw—the screw which adjusts the fullness of the gather.

The Adjusting Lever—the lever which sets the Ruffler for plain gathering or plaiting.

The Ruffling Blade—the upper blue steel blade with teeth at the end to push the material in plaits up to the needle.

The Separator Blade—the lower blue steel blade without teeth, which prevents the teeth of the ruffling blade from coming into contact with the teeth on the feed dog.

The Separator Guide—the guide on the under side of the Ruffler, containing several slots into which the edge of the material is slipped to keep the heading of the ruffle even.

Lines 1, 2, 3, 4 and 5 (Fig. 99) indicate where the material is to be placed for various operations, as follows :

Line 1—the proper position for the material to which the ruffle is applied.

Line 2—the material to be gathered.

Line 3—the facing for the ruffle.

Line 4—the strip of piping material.

Line 5—the edge to be piped.

Refer to this illustration when inserting the material in the Ruffler.

Oiling the Ruffler.

The Ruffler requires an occasional oiling of all working parts to prevent them from sticking. A drop of oil at each point indicated in Fig. 100 is sufficient. If possible sew on a waste piece of material after oiling to prevent your work from becoming soiled. If the Ruffler does not plait evenly, a drop of oil may remedy the trouble.

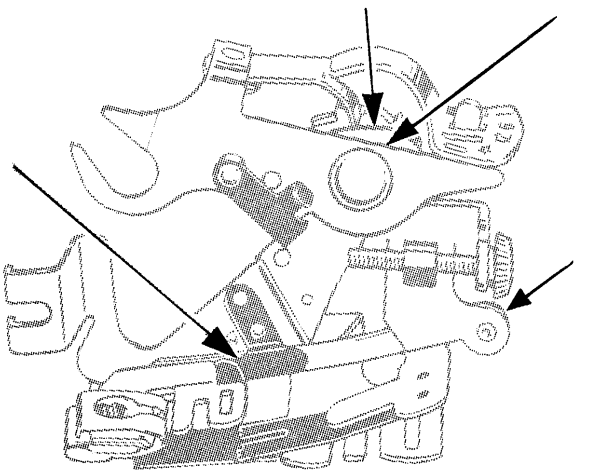

FIG. 100. OILING POINTS ON RUFFLER.

To Attach the Ruffler to the Machine.

Raise the needle bar to the highest point and remove the presser foot. Attach the ruffler foot to the bar, at the same time placing the fork-arm astride the needle clamp. Turn the hand wheel slowly by hand to see that the needle comes down in the centre of the needle hole.

How to Adjust the Ruffler for a Plain Gather.

To adjust the Ruffler for a plain gather the projection must be placed in the slot marked 1 on the adjusting lever (Fig. 101). If it is placed in the slot marked 5 the Ruffler will then be adjusted for plaiting.

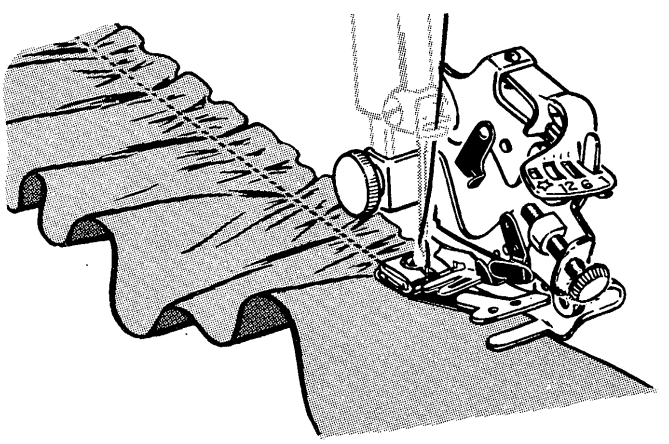

FIG. 101. MAKING A PLAIN GATHER.

Inserting the Material. in the Ruffler and Making a Plain Gather.

Insert the material in the Ruffler between the two blue blades following line 2, Fig. 99. Pull the edge of the material to be gathered forward until it is slightly past the needle, lower the presser bar and sew. (See Fig. 101). The fullness of the ruffle is determined by the position of the adjusting screw. To lessen the fullness turn the screw **out.** To **increase** the fullness turn the screw **in.**

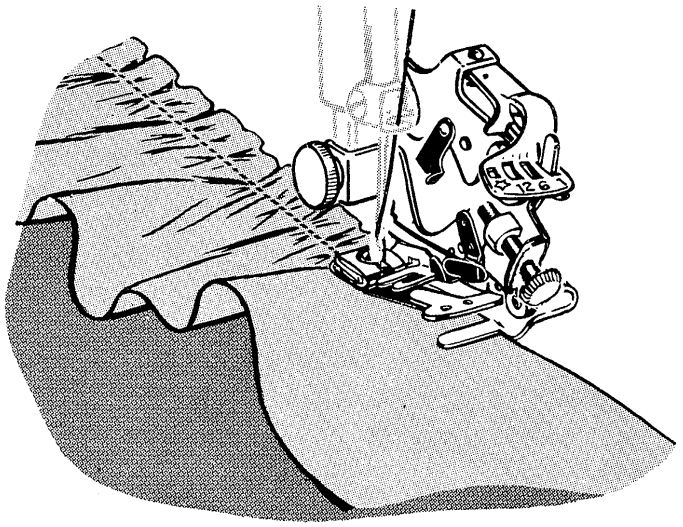

FIG. 102. MAKING A RUFFLE AND SEWING IT TO THE GARMENT.

Making a Ruffle and Sewing it to the Garment at One Operation.

After having tested and adjusted the Ruffler for fullness, place the material to be ruffled in the Ruffler between the two blue blades and insert the garment to which it is to be attached under the separator blade following line 1, Fig. 99. Proceed as for plain gathering, guiding the material lightly so that it will not feed away from the heading guide. (See Fig. 102).

A Facing May be Added while the Ruffle is being Made.

First insert the material for the ruffle in the Ruffler between the two blades and the garment under the separator blade, as directed for sewing the ruffle to the garment in one operation. Place the material for the facing in the Ruffler, following line 3, Fig. 99. The facing may be of straight or bias material. If the facing is to be on the right side of the garment, place the garment and the ruffle so that their wrong sides are together. If the facing is to be on the wrong side, place the right sides of the garment and the ruffle together. (See Fig. 103).

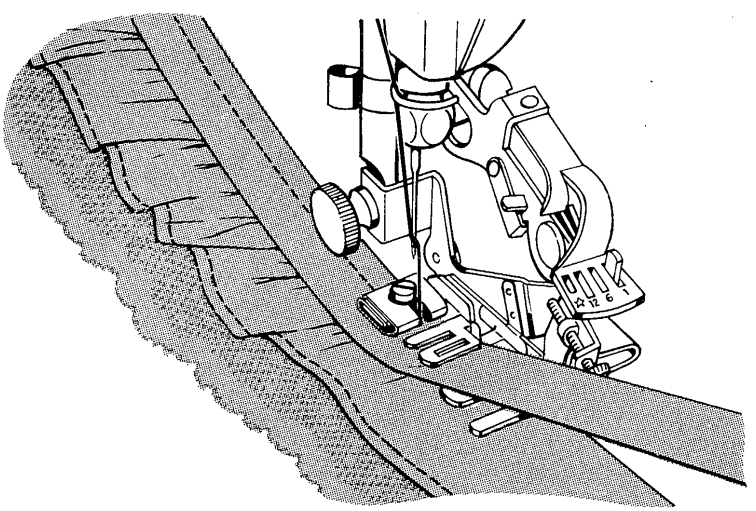

FIG. 103. ADDING A FACING AS THE RUFFLE IS BEING MADE.

To Apply Rows of Ruffles.

Rows of ruffles may be stitched to the work in hand while they are being made, by placing the work under the Ruffler and the material for the ruffle between the blades, as shown in Fig. 104. The position on the work for the ruffles may be indicated by a basting thread or a chalk mark.

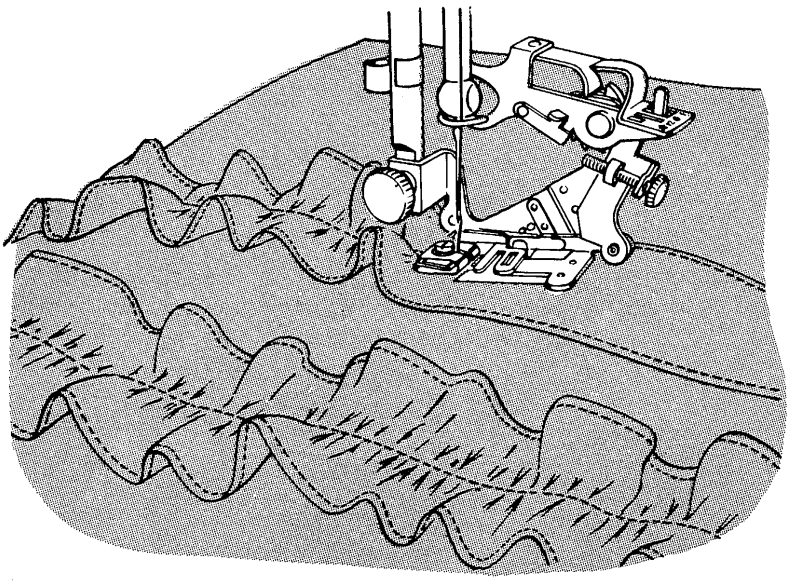

FIG. 104. APPLYING ROWS OF RUFFLES TO A GARMENT.

If the heading on the ruffle is to be more than one-quarter of an inch wide, do not place the material in the guide when following line 2 (Fig. 99) but place the edge of the ruffle between the blades and to the right of the needle the desired distance, up to one inch, and guide it as the machine sews.

The edges of the ruffles may be hemmed with the foot hemmer, or picot-edged on a special attachment or on a special hemstitching machine. The addition of a narrow lace edge is often attractive.

To Adjust the Ruffler for Plaiting.

The Ruffler may be adjusted for plaiting by placing the projection in the slot marked 5 in the adjusting lever. The adjusting screw on the Ruffler must be turned down as far as it will go when making plaiting. The Ruffler will make a plait about one-eighth of an inch wide. To make the plaits further apart, **lengthen** the stitch on the sewing machine. To make them closer together, **shorten** the stitch.

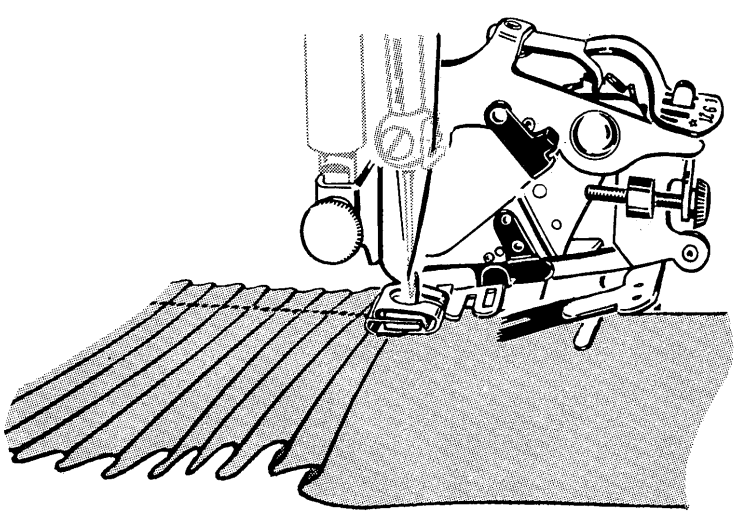

FIG. 105. THE RUFFLER ADJUSTED FOR PLAITING.

Any material with dressing, such as lawn, organdie or taffeta, may be successfully plaited with the Ruffler. Softer materials may be plaited, but the plaits will not lie flat unless they are very well pressed.

Plaiting may be applied to the garment while it is being made, following the directions on page 52. A facing may also be applied, as illustrated on page 52.

Group Plaiting and Gathering.

The Ruffler may be adjusted for group plaiting by lifting the adjusting lever and placing it on top of the projection at the point indicated by the star on the adjusting lever. This should be done at the points where you wish to make the spaces between the plaits.

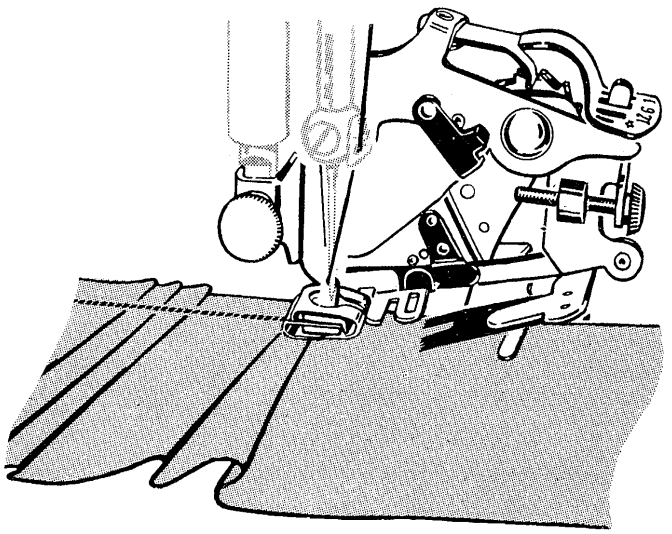

The Ruffler will then stop and plain stitching will be made until the lever is again adjusted so that the projection comes up through the slot 5. The sewing machine must be run slowly and the plaits counted. For example, when making plaits in groups of five with one-inch spaces between the groups, run machine until the fifth plait has been made, then adjust the Ruffler to stop plaiting and stitch plain for one inch.

FIG. 106. GROUP PLAITING.

Shirring.

When rows of flat stitching at a distance from the edge of the material are required, the Shirring Plate must be used in conjunction with the Ruffler.

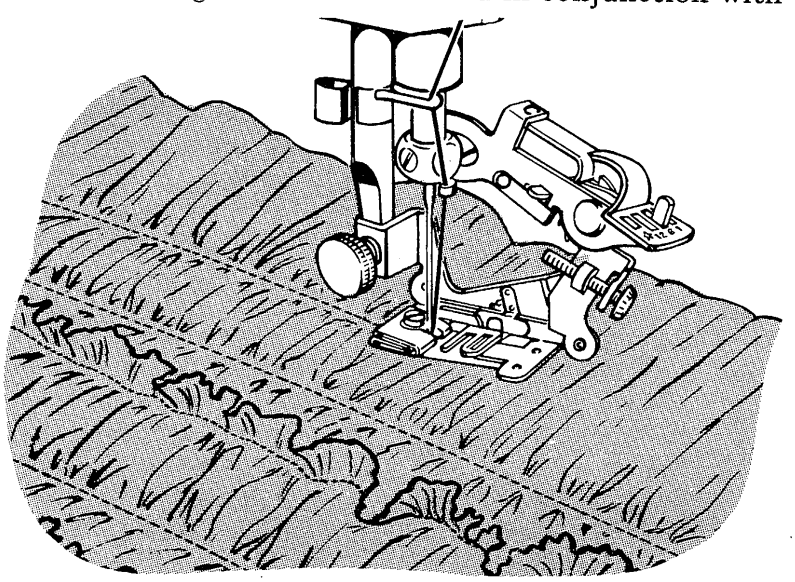

FIG. 107.

To Attach the Shirring Plate to Machines 15K, 66K, 99K, 185K and 201K.

Insert the downwardly projecting hook of the Shirring Plate into the hole in the throat plate, at the right of the feed dog. Then place the thumb screw, which is in the slot of the attachment, into the hole in the bed plate of the machine. The shirring plate must be firmly secured by tightening the screw.

To Shirr.

Remove from the ruffler the lower blue blade by loosening the small screw at the side of the ruffler ; then attach the latter to the presser bar, as already instructed.

Place the material between the blue blade and the Shirring Plate, lower the Presser Bar Lifter and proceed as in ruffling.

Shirring may be done with a loose upper tension when it is desired to slide the gathers on the thread to fit a certain space.

Embroidery Silk may be used in the bobbin and a very ornamental stitch will be visible along the rows of shirring. Fancy hand sewing stitches are also sometimes used effectively over the rows of shirring.

The Quilter.

The Quilter is attached to the machine in place of the regular Presser Foot, as shown in Fig. 108.

The Quilter Guide can be used at either the right or left of the needle, and the distance of the Guide from the needle determines the width between the rows of stitching. Slide the wire into the holder prepared for it on the foot and set it to the width desired ; then lower the foot on to the material.

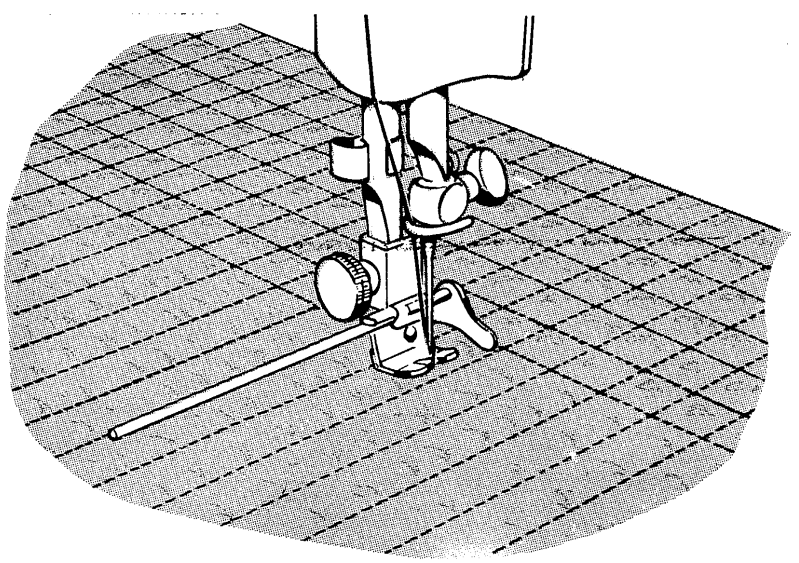

FIG. 108.

To Quilt. For the first row of stitching, let the Quilter Guide follow the edge of the material, a straight crease, or a line, as preferred. The succeeding rows are made straight and at a uniform distance by keeping the previous row of stitching steadily under the Guide, as shown.

The Quilter may be used for other purposes, such as a guide when applying rows of ornamental stitching, and the Quilter Foot without the movable bar is used with the Underbraider, and also for Ornamental Stitching described on page 58.

The Underbraider.

Raise the needle and, in place of the ordinary presser foot, fit the Quilter Foot, without the movable bar. But if it is desired to apply braid in parallel rows, the bar may be left on to act as a guide.

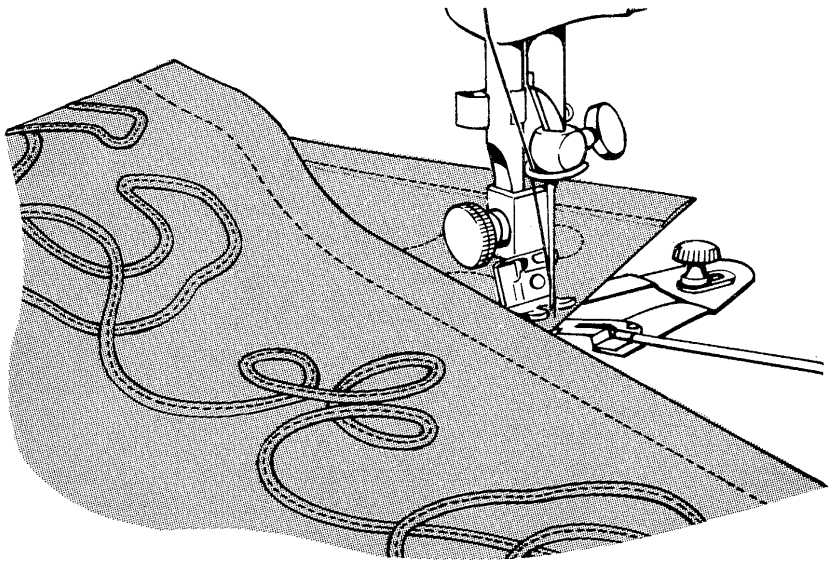

FIG. 109.

Attach the Underbraider as instructed for the Shirring Plates on page 54. In the case of Machines 15K, 66K, 99K, 185K and 201K the attachment has to be secured by means of the thumb screw.

Any braid that will fit the Underbraider tube and be stitched through the centre may be used in the Underbraider. It is sometimes necessary to force the Braid under the spring by pulling it, or to lift the spring with the screwdriver. The braid should be well under the foot before starting to sew.

How to Perforate Braiding Designs.

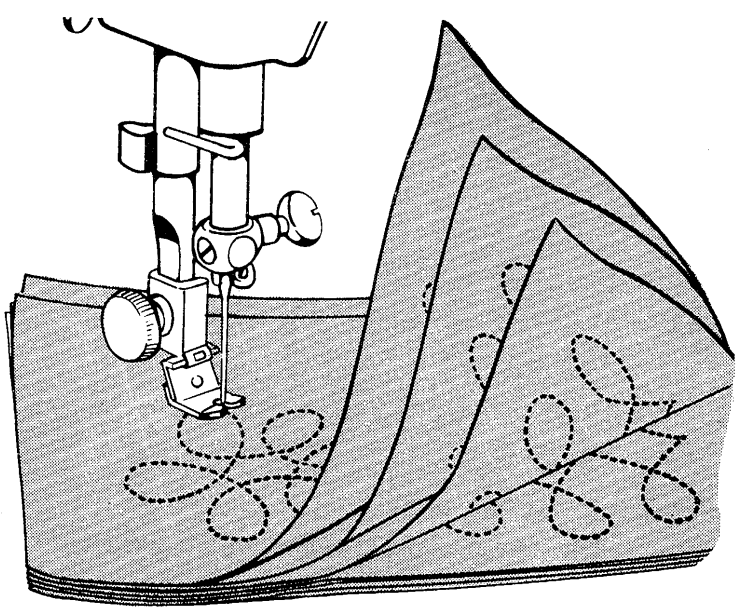

FIG. 110.

A braiding design may be copied with the sewing machine by pinning it to several sheets of paper, as shown in Fig. 110.

Attach the quilter foot and, without threading the machine, follow the design with the needle.

You will be able to make several copies of the design in this way. The perforated pattern is then pinned to the material to be braided and torn away when the braiding is finished.

How to Braid.

The design to be braided must be applied to the wrong side of the garment.

For most braiding, a medium length of stitch should be used, but when braiding small curves it is sometimes necessary to use a shorter stitch and to run the machine slowly in order to follow the curves.

A braiding design should always be started where it is convenient to pull the braid through to the under side. A good starting point is usually an inside one or at the end of a scroll, but this can be determined best from the design you wish to braid.

The braid should pull freely from the roll. It requires no guiding except to see that it does not turn over as it enters the braider tube.

When braiding a square corner, sew until the corner is reached, then stop the machine with the needle in the braid, raise the presser bar and turn the material, using the needle as a pivot. Lower the presser bar and proceed to sew.

How to Fasten the Ends of Braid.

When you have finished braiding, make a small hole with a stiletto, or with scissors, at each end of the design and pull the ends of braid through to the underside of the material. Fasten the ends with a hand sewing needle.

To Braid on Net or Fine Material.

To braid on net or fine material it is necessary to have the design stamped on paper, and if the material is difficult to stitch when using a single thickness, it is well to slip a piece of paper under the quilter foot also.

Ornamental Stitching.

Requiring no special attachment or skill, this effective form of ornamental stitching deserves attention from those who like to explore the many novel stitching processes open to the Singer machinist.

Very attractive decorations may be made by winding the bobbin with heavy embroidery silk and using plain sewing silk in the needle. The under tension is entirely released. (See page 17). The silk should pull perfectly free from the bobbin. The stitching is then done as for plain sewing, with the right side of the material down. If desired, a silk of contrasting colour may be used on top to show between the stitches. (See Fig. 111). Thread the machine in the usual way and pull up the under thread before starting to stitch. The length of stitch will vary the effect of this trimming and the upper tension may also be adjusted slightly to make the stitches stand up and appear loose. About ten stitches to the inch makes an attractive decoration for woollen material.

A novel trimming may be made by stamping a design on the wrong side of the garment and following the line with the needle. If the design is small, it may be necessary to run the machine slowly and to raise the bar occasionally to adjust the material properly at the curves. It will also be found easier to stitch over the design if the Quilting Foot (see page 55) is

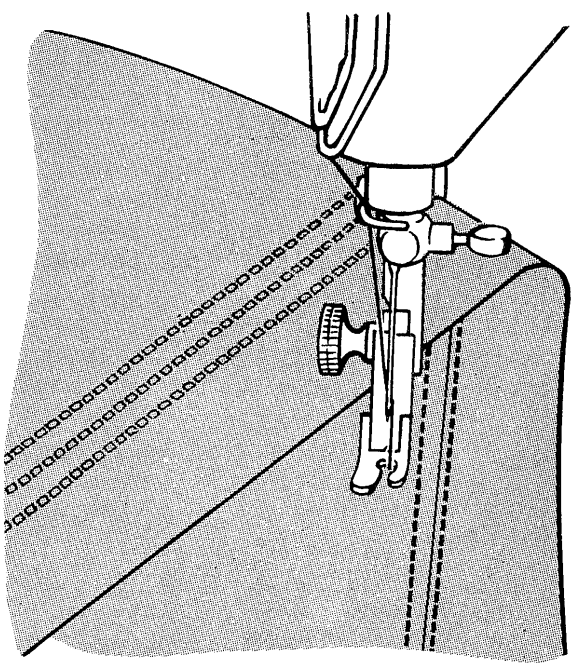

FIG. 111. ORNAMENTAL STITCHING WITH THE PRESSER FOOT.

used, as it allows a clearer view of the lines to be followed. When the design is finished, the end of the silk may be threaded into a hand sewing needle and pulled through to the under side for fastening.

This stitching will add smartness to frocks and other garments, and can be employed most attractively upon children's dresses. Various furnishings are also suitable for treatment, while, by substituting fine wool on the bobbin, instead of the silk mentioned above, quite artistic but inexpensive cushion covers, etc., in coarse linen, crash or similar material, can be decorated with suitable designs.

THE ZIPPER FOOT

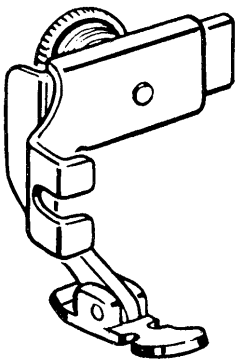

FIG. 112. THE ZIPPER FOOT.

The zipper foot is designed for accurate placement of stitches close to a raised edge. The hinged feature of this foot insures even feeding over pins, heavy layers of fabric or cross seams. It is attached to the machine in place of the presser foot, and may be adjusted to either side of the needle.

Applications.

Zipper insertions
Corded seams
Tubular cording
Slip cover welting

Preparation

- Attach zipper foot to machine in place of presser foot.
- Loosen zipper foot thumb screw and adjust foot to right or left of needle, as desired.
- Align the notch in the toe with the needle hole in the throat plate.
- Check adjustment by lowering needle into side notch, making sure it clears the foot.
- Lock foot in position by tightening thumb screw.

Skirt Zipper.

- Machine baste placket opening of skirt and press this seam open.
- Attach zipper foot to machine in place of presser foot.
- Position zipper foot to right of needle.
- Open zipper.
- Place zipper face down on seam allowance with edge of teeth at seam line.
- Turn the back seam allowance away from body of skirt.
- Stitch zipper tape to the seam allowance.

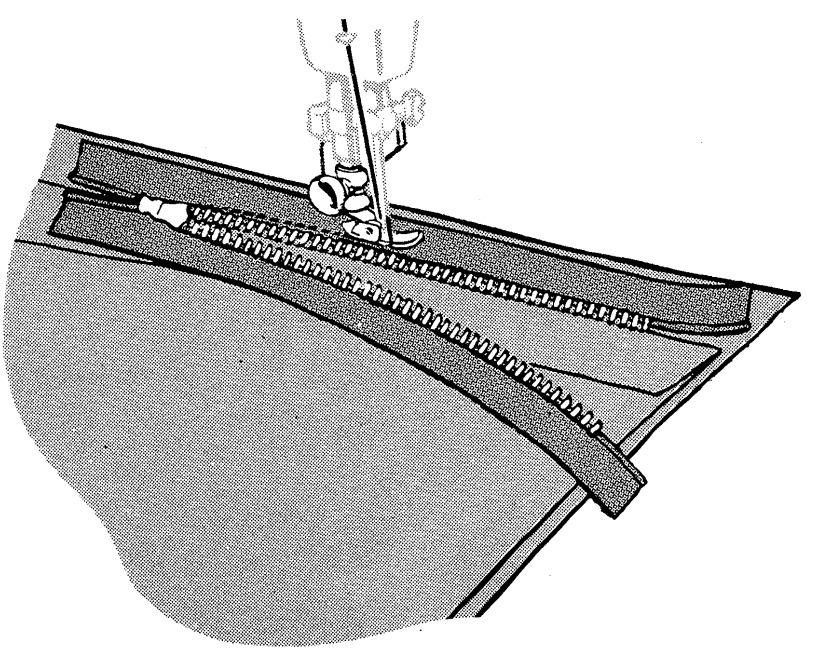

FIG. 113.

- Move foot to the left of needle.
- Close zipper and turn it face up.
- Smooth back the seam allowance at the edge of the zipper.
- Top stitch the seam allowance to the tape close to the folded edge.

- Turn skirt to right side.
- Fold zipper to front of skirt.
- Pin in place from right side.
- Base.
- Move foot to right of needle.
- Stitch across lower end of zipper and up to waistline.
- Remove basting.

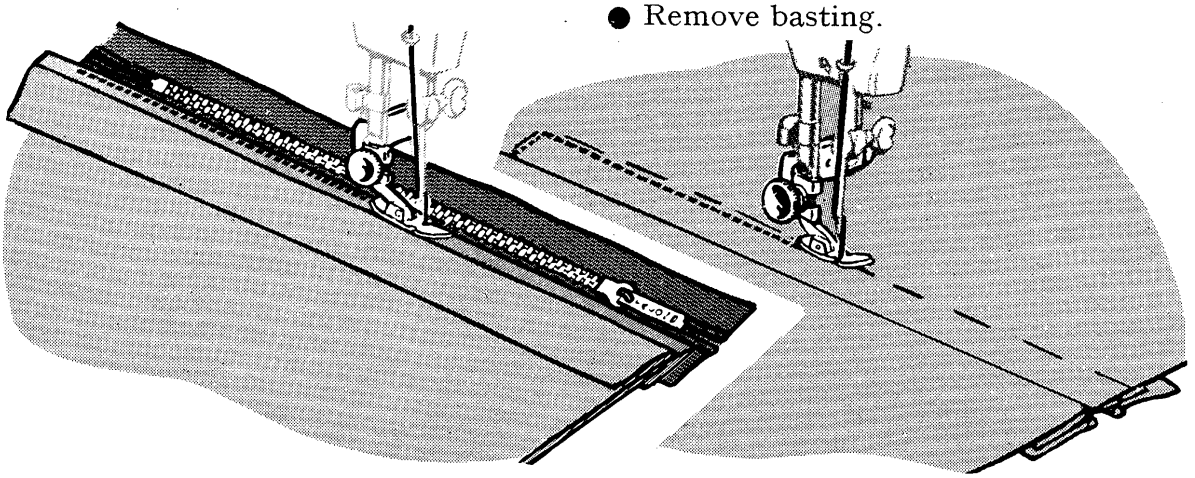

FIG. 114.

FIG. 115.

Corded Welting.

Cable cord comes in a variety of sizes and when covered with a firmly woven fabric makes a corded welting that is an excellent seam finish.

This welting is prepared in advance and then stitched into the seam. Cut a true bias strip $1\frac{1}{4}$ inches wide, plus three times the width of the cord of either self or contrasting fabric. Sew strips together on the lengthwise grain to obtain desired length.

- Adjust zipper foot to left side of needle.
- Encase cord in bias strip, raw edges even.
- Lower presser bar.
- Stitch close to cord, using a stitch length slightly longer than for plain seaming of same fabric.
- Do not crowd stitching against cord.

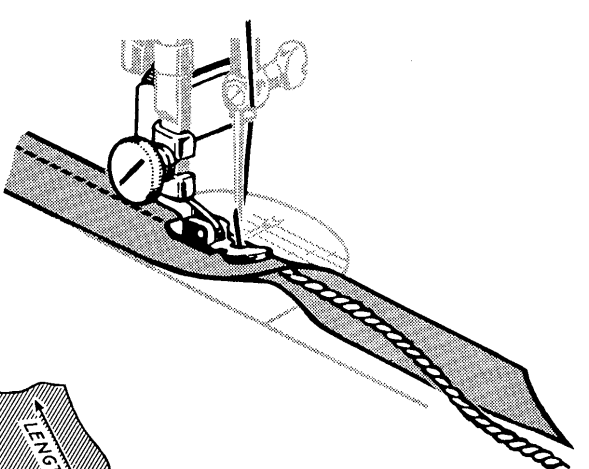

FIG. 117.

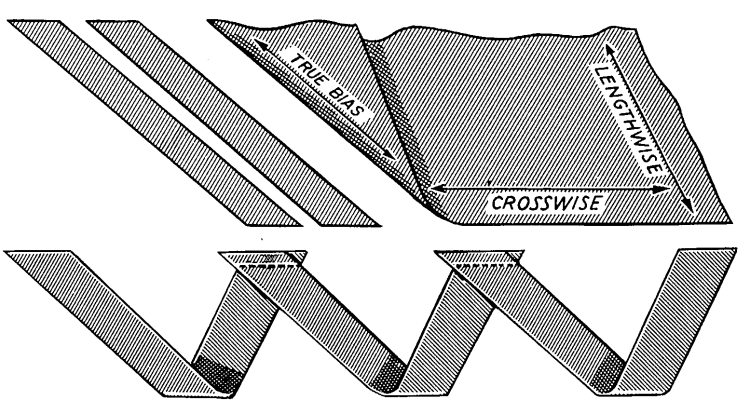

FIG. 116.

Corded Seams.

The corded seam is a typical treatment for slip covers, children's clothes, blouses and lingerie.

When cording a seam the zipper foot is usually adjusted to the right of the needle so that the bulk of the work will fall to the left.

- Attach corded welting to right side of a single seam edge, using same length stitch as used for welting (page 60). Guide edge of foot next to cord, but **do not crowd.**
- Place attached corded welting over second seam edge, and pin or baste together.
- Keep the first stitching uppermost as a guide and position the seam under the needle.
- Stitch, this time crowding the foot against the cord.

This method produces evenly joined seam edges and tightly set welting.

Curved seams are corded as easily as straight seams, except that a shorter stitch is used. Since the seam allowance of the welting is bias, it is easy to shape it to the seam.

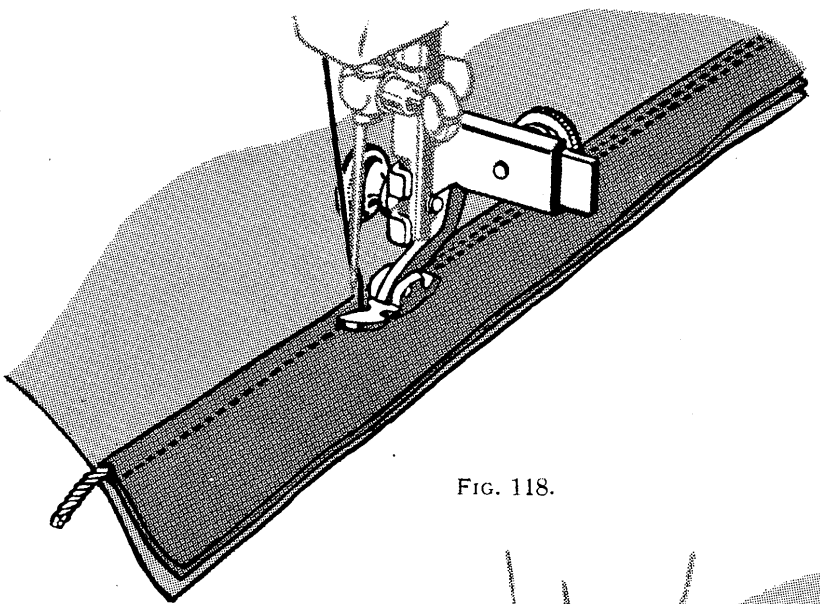

FIG. 118.

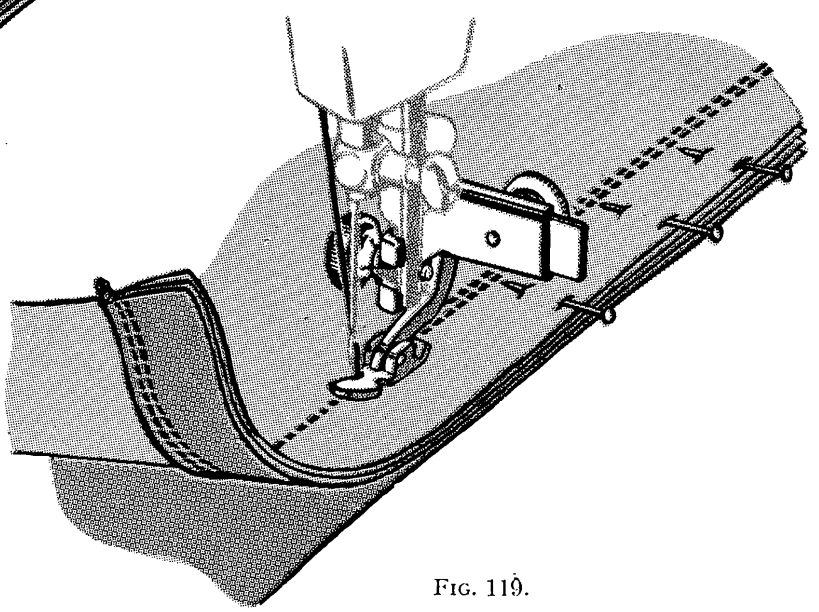

FIG. 119.

THE GATHERING FOOT

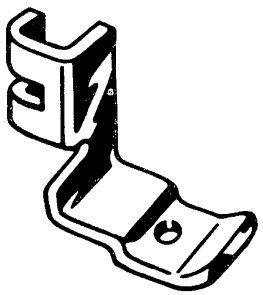

FIG. 120. THE GATHERING FOOT.

Single or multiple rows of shirring can be quickly and expertly placed with the gathering foot. Evenly spaced shirring is insured as this foot is designed to lock fullness into every stitch.

Applications.

Plain shirring	Waffle shirring
Elastic shirring	Machine smocking

Shirring

Shirring is usually done on the crosswise grain of the fabric. Soft fabrics lend themselves to shirring better than firm fabrics.

The amount of fullness is very simply controlled by stitch length and degree of tension.

A long stitch produces more fullness than a short stitch. Balanced tensions are always required, but heavy tensions, both upper and lower, produce more fullness than light tensions.

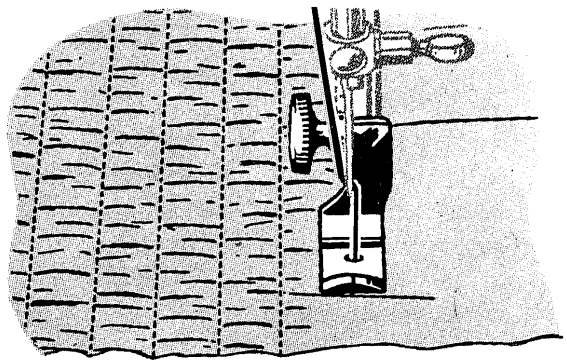

FIG. 121.

Many lovely effects are accomplished with simple rows of evenly spaced shirring. A yoke section, insert or trimming band of self-fabric affords an interesting contrast of texture when stitched with the gathering foot in rows $\frac{1}{4}''$ apart.

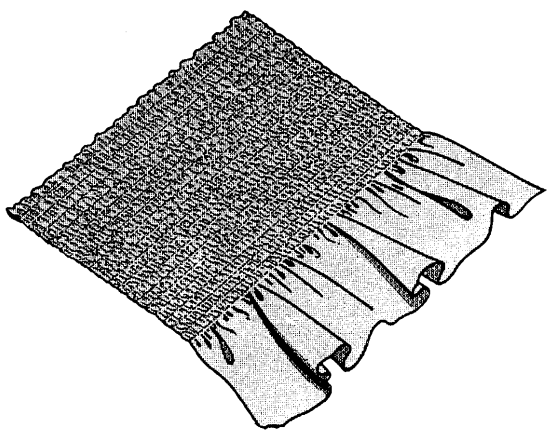

FIG. 122.

THE EDGE-STITCHER

A COMBINED EDGE-STITCHING, LACE-JOINING AND PIPING ATTACHMENT.

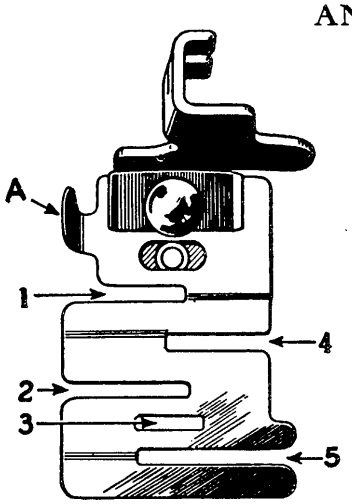

FIG. 123.

This useful attachment is fastened to the machine in place of the presser foot, and is an indispensable aid whenever stitching must be kept accurately on the extreme edge of the material. The slots numbered 1 to 5 in Fig. 123 serve as guides for sewing together laces, insertions and embroideries, sewing in position hemmed or folded edges, piping or sewing flat braid to a garment.

Adjusting the Edge-Stitcher.

After attaching the edge-stitcher to the machine, turn the hand wheel slowly by hand to see that the needle goes through the centre of the needle hole. The distance of the line of stitching from the edge of the material in the slots can be regulated by pushing the lug (A) to the right or left. If it moves hard, put a drop of oil under the blue spring, then wipe it dry.

Sewing Lace Together with the Edge-Stitcher.

It is difficult to sew two lace edges together even after basting, but the edge-stitcher makes it possible to stitch on the very edge. Place one edge in slot 1 and the other in slot 4, and adjust lug (A) until both edges are caught

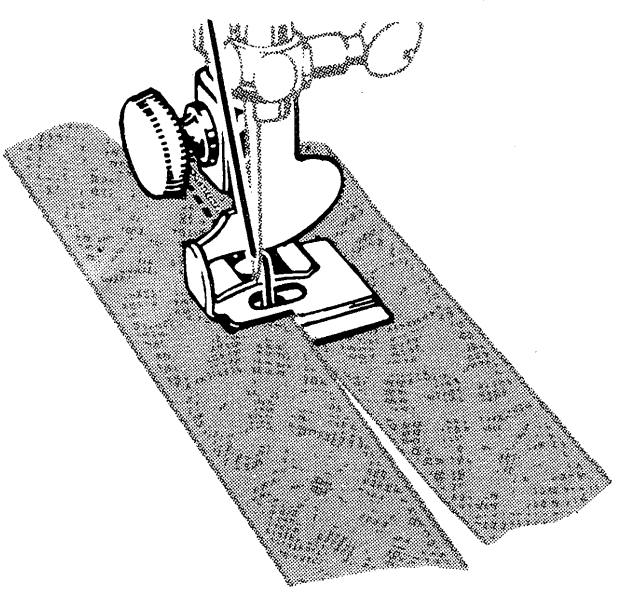

FIG. 124. SEWING LACE TOGETHER.

by the stitching. Hold the two pieces slightly overlapped to keep them against the ends of the slots. The thread tensions should be loose to avoid puckering of fine lace.

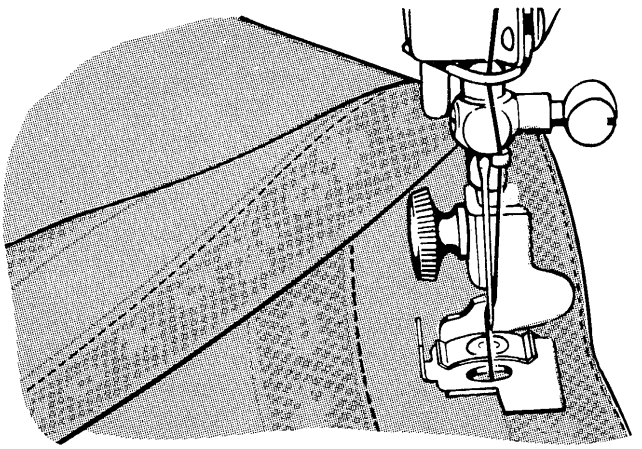

FIG. 125. SETTING IN LACE INSERTION.

Lace and ribbon or other insertions can be set in by using the same slots (1 and 4). The material may be folded over before placing it in the slot so that a double thickness is stitched and will not pull out. The surplus material is trimmed away close to the stitching as shown in Fig. 125.

Piping with the Edge-Stitcher.

Piping is very attractive if the correct contrasting colour is chosen for the piping material. Place the piping, with its finished edge to the left, in slot 3. Place the edge to be piped in slot 4, as shown in Fig. 126.

Piping should preferably be cut bias, and should be cut to twice the width of the slot (3) in the edge-stitcher so that it can be folded once.

Applying Bias Folds with the Edge-Stitcher.

Folded bias tape or military braid, used for neat and colourful trimming, may be sewn on by placing the garment under the edge-stitcher, the same as

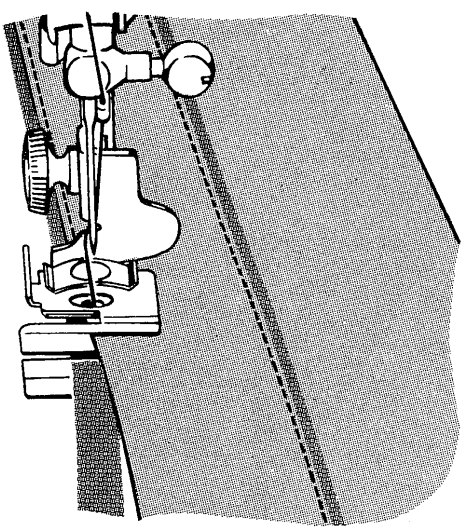

FIG. 126. PIPING WITH THE EDGE-STITCHER.

under a presser foot, and placing the tape in slot 1 or 4. To make a square corner, sew until the turning point is reached, then remove the tape from the attachment and form the corner by hand, replace it in the slot and continue stitching, as shown in Fig. 127. To space two or more parallel rows, a guide line such as a crease, chalk or basting thread should be used.

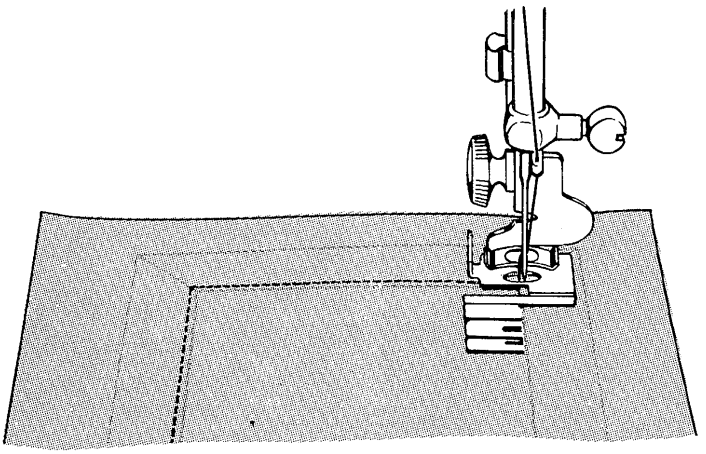

FIG. 127. APPLYING BIAS FOLDS WITH THE EDGE-STITCHER.

Stitching a Wide Hem with the Edge-Stitcher.

A wide hem on sheets, pillow slips, etc., may be stitched evenly with the edge-stitcher after the hem has been measured and the edge turned.

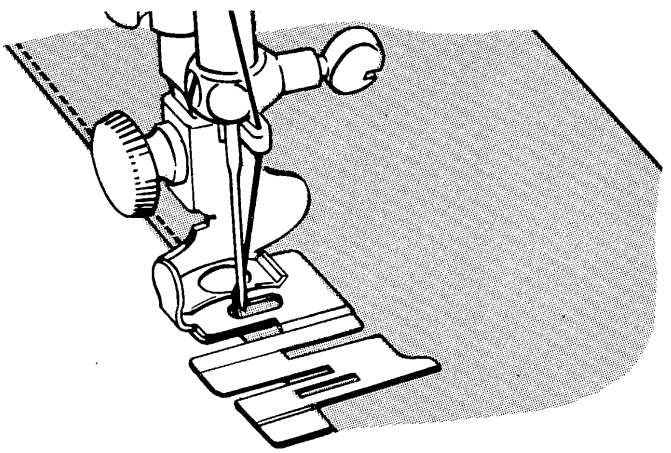

FIG. 128. MAKING A WIDE HEM.

Insert the edge in slot 5 as shown in Fig. 128 and adjust to stitch as close to the edge as desired.

Making a French Seam.

An even French seam may be made by inserting the two edges to be joined, wrong sides together, in slot 1 or 2 and stitching close to the edge ; then folding both right sides together and inserting the back of the seam into slot 1 again and stitching with just enough margin to conceal the raw edges. See Fig. 129.

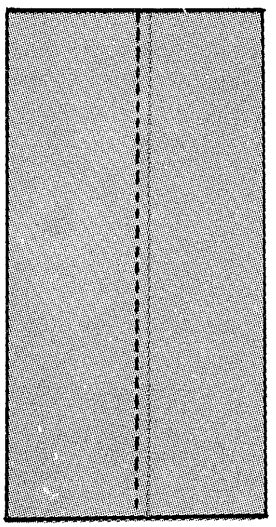

FIG. 129. A FRENCH SEAM.

Tucking with the Edge-Stitcher.

Dainty narrow tucking may be produced on the edge-stitcher by inserting creased folds in slot 1 as shown in Fig. 130, and adjusting the edge-stitcher

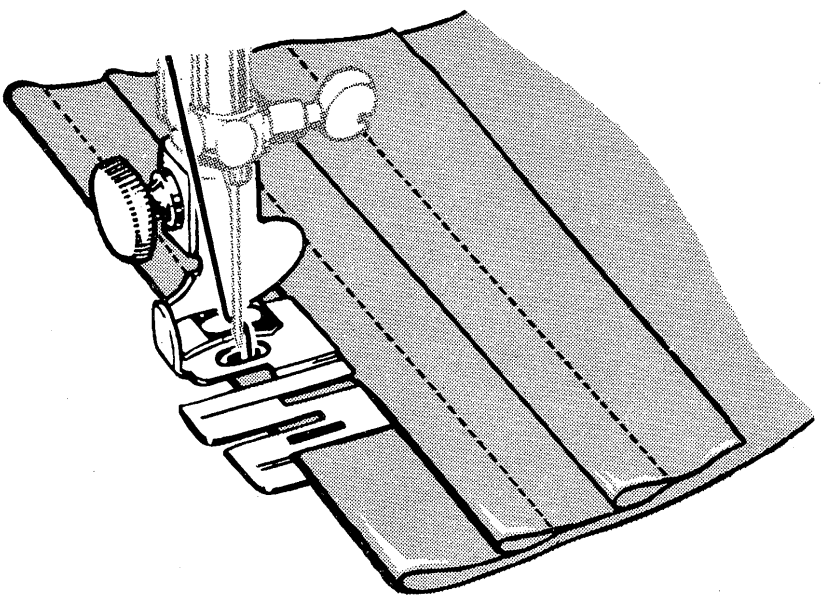

FIG. 130. TUCKING WITH THE EDGE-STITCHER.

to right or left for the desired width of tuck, up to $\frac{1}{8}$ inch. Successive tucks may be easily creased by folding the material at the desired distance from the previous tuck, and then running the length of the fold over a straight edge such as the edge of the sewing machine cabinet. The secret of good tucking lies in a light tension, short stitch, and fine thread and needle.

THE SEAM GUIDE

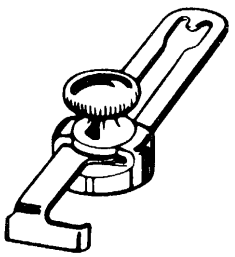

FIG. 131.

The seam guide aids in attaining uniformity of seam width. It provides for stitching to be placed at any distance between $\frac{1}{8}$" to $1\frac{1}{4}$" from edge of fabric.

Application

Seams — Blind Stitching
Top Stitching — Decorative Stitching

Attachment is used in connection with a presser foot. It is secured to bed of machine in either of threaded holes to right of needle.

SEAMS

For straight seams. Align guide with presser foot. Adjust machine for straight stitching. Pin seam edges and baste if necessary. Guide fabric edges lightly against guide while stitching.

For curved seams: Set attachment at an angle so that end closest to needle acts as a guide. Shorten stitch length for greater elasticity and strength.

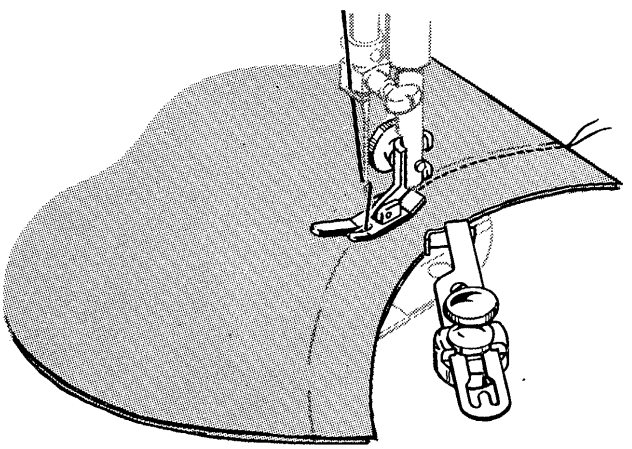

FIG. 132.

Attachments supplied with 401 and 404 Slant Needle Machines :—

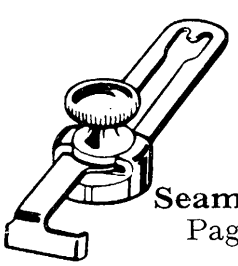

Seam Guide
Page 65

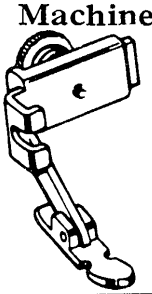

Zipper Foot
Page 59



Foot Hemmer
Page 41

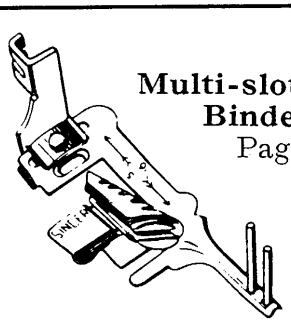

Multi-slotted Binder
Page 33

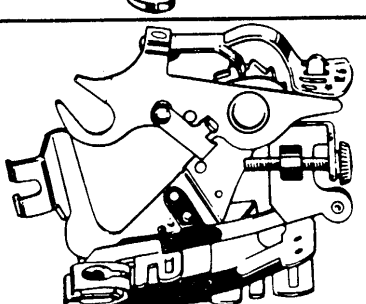

Ruffler
Page 50



Gathering Foot
Page 61

FIG. 133.

Darning.

Anyone who can use a sewing machine can make darns in household napery in a fraction of the time required for hand darning, and these will be infinitely superior in appearance and will wear and wash better.

The only special fittings required for the work—all of which may be had for the outlay of a few shillings—are a Darning or Embroidery Hoop, a small plate to cover the feed, and a little Spring Presser to hold the material in position while the needle is on its upward course.

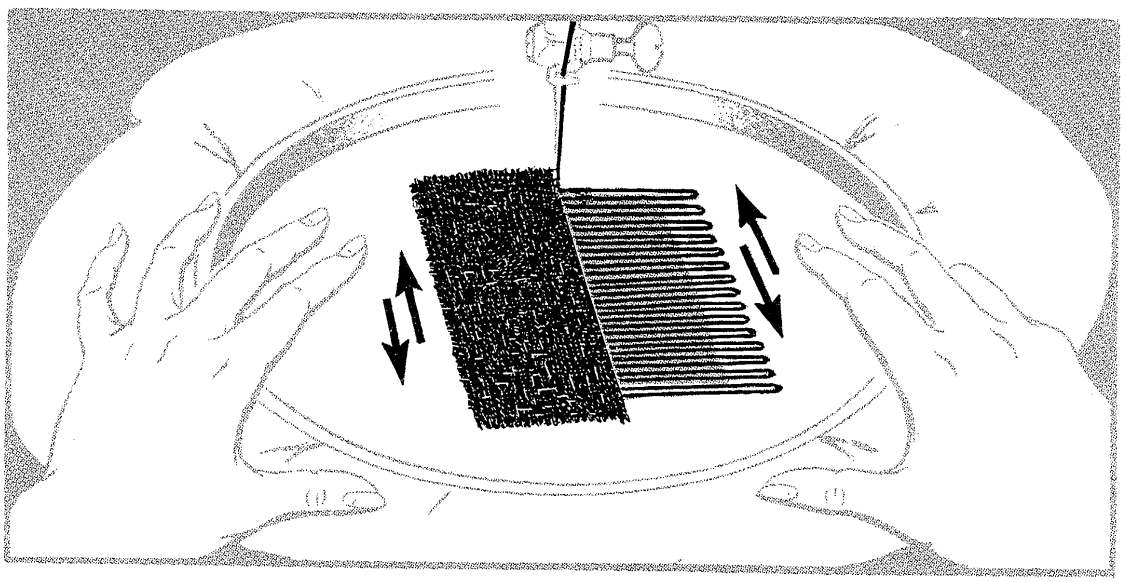

FIG. 134.

To Prepare Singer 327K, 328K and 329K Machines

First remove the presser foot and the screw which fastens it to the presser bar. Throat Plate Raising Plate should then be inserted under the Throat Plate, as shown in Fig. 135. For detailed information regarding this and the darning foot for these machines, see instruction books.

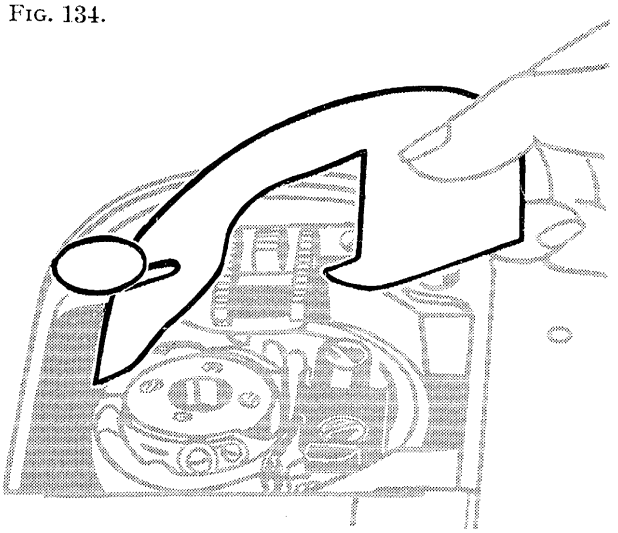

FIG. 135.

To Prepare Singer 66K, 99K and 185K Machines for Darning.

First remove the presser foot and the screw which fastens it to the presser bar. Then remove the needle clamp and in its place fix the Spring Darning Presser No. 86496, or 121094. Before fixing to the needle bar, pass the needle up through the centre of the small disc at the bottom of the Spring Presser.

Take care that the flat side of the needle shank is towards the hand wheel, and push it up into the clamp as far as it will go before finally tightening the clamp screw.

Pull out the shuttle cover slide far enough to allow the feed cover plate to be clipped over the needle plate, as shown in Fig. 137 ; close the slide again and make sure that the needle comes down through the centre of the hole in the feed cover plate and needle plate.

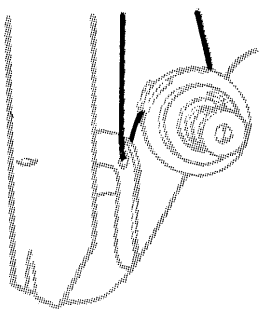

FIG. 136. THREADING FOR DARNING ON 66K, 99K AND 135K MACHINES.

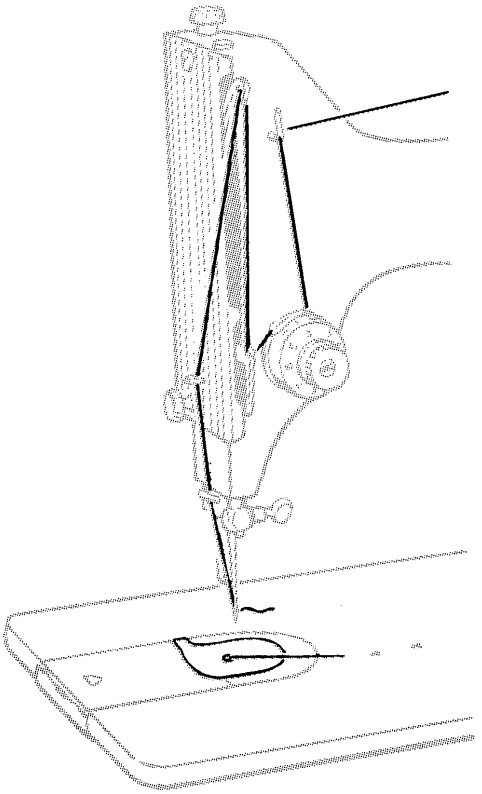

FIG. 137.

When threading the 66K, 99K and 185K Machines for darning, care must be taken that the thread is passed through the hole in the slack thread regulator, as shown in Fig. 133. All other machines are threaded in the usual way.

Attaching Embroidery Hoop Guide on 404 Machine for Darning.

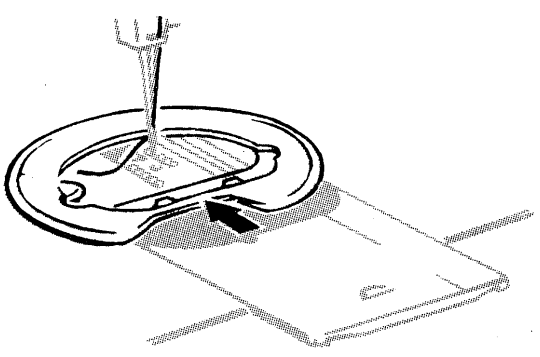

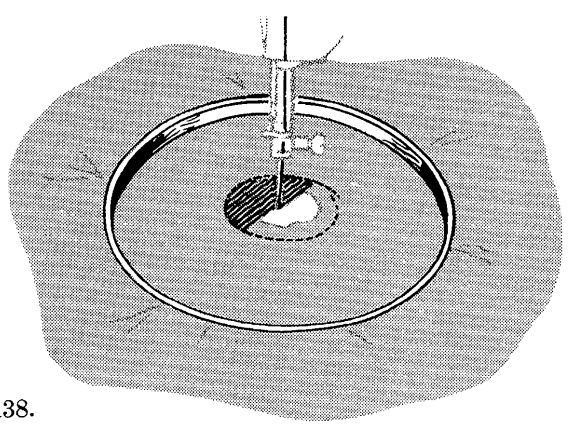

FIG. 138.

Procedure—

- Remove presser foot.
- Elevate throat plate by setting lever in centre (darning) position.
- Open slide plate.
- Position hoop guide over throat plate with two extensions under throat plate, as shown above.
- Slide hoop guide into place.
- Close slide plate.

To Prepare Singer 15K110 and 201K Machines for Darning.

With Singer 15K110 and 201K Machines Spring Darning Foot No. 121094 should be used, but no Feed Cover Plate is required, as an ingenious arrangement provides for making the Feed inactive—see Instruction Book.

The following instructions for manipulating the work apply to darning on all Singer Domestic Sewing Machines.

Darning Table Linen, Towels, etc.

To ensure a soft, smooth finish, it is essential that a fine needle and fine mercerised cotton should be used, which can be obtained from Singer Shops. Ordinary cotton, however fine, results in a rather stiffer, heavier darn.

As the feed of the Machine has been covered by the feed cover plate (or lowered in the case of 15K110 and 201K Machine) it will be understood that the movement of the work and the length of stitch must be controlled by the operator moving the darning hoop. A slow movement of the hand will give a short stitch and a quick movement a longer one.

Trim ragged edges from area to be darned and centre worn section in embroidery hoops. Position work under needle and lower presser bar to engage tension. Hold needle thread loosely with left hand, turn hand wheel over and draw bobbin thread up through fabric. Hold both thread ends and lower needle into fabric. Outline area to be darned with running stitches for reinforcement. Place stitches $\frac{1}{4}''$ from edge of open area.

Hold the hoop with both hands, and with a steady, continuous movement, work backwards and forwards across the hole, keeping the lines of stitching an equal distance apart and running about $\frac{1}{4}''$ beyond the edge of the hole and working in the same direction as the weft or fine threads of the material.

After the stitching has been completed one way turn the hoop round and continue in a similar manner across the first lines of stitching. These second lines of stitching should be closer together and run parallel with the warp or thicker threads of the material. Take this stitching about $\frac{1}{2}''$ beyond the hole, thus covering the first lines of thread entirely. This will strengthen the material round the hole without giving a heavy darn.

When finished, the darn should be either round or oval in shape, thus avoiding too much strain on one thread. The darn should match as nearly as possible the texture of the material. If the material is sheer, weave a loose darn by moving the hoop far enough to make a long stitch. If a firmer darn is required, move the hoop a short distance so that shorter stitches are made.

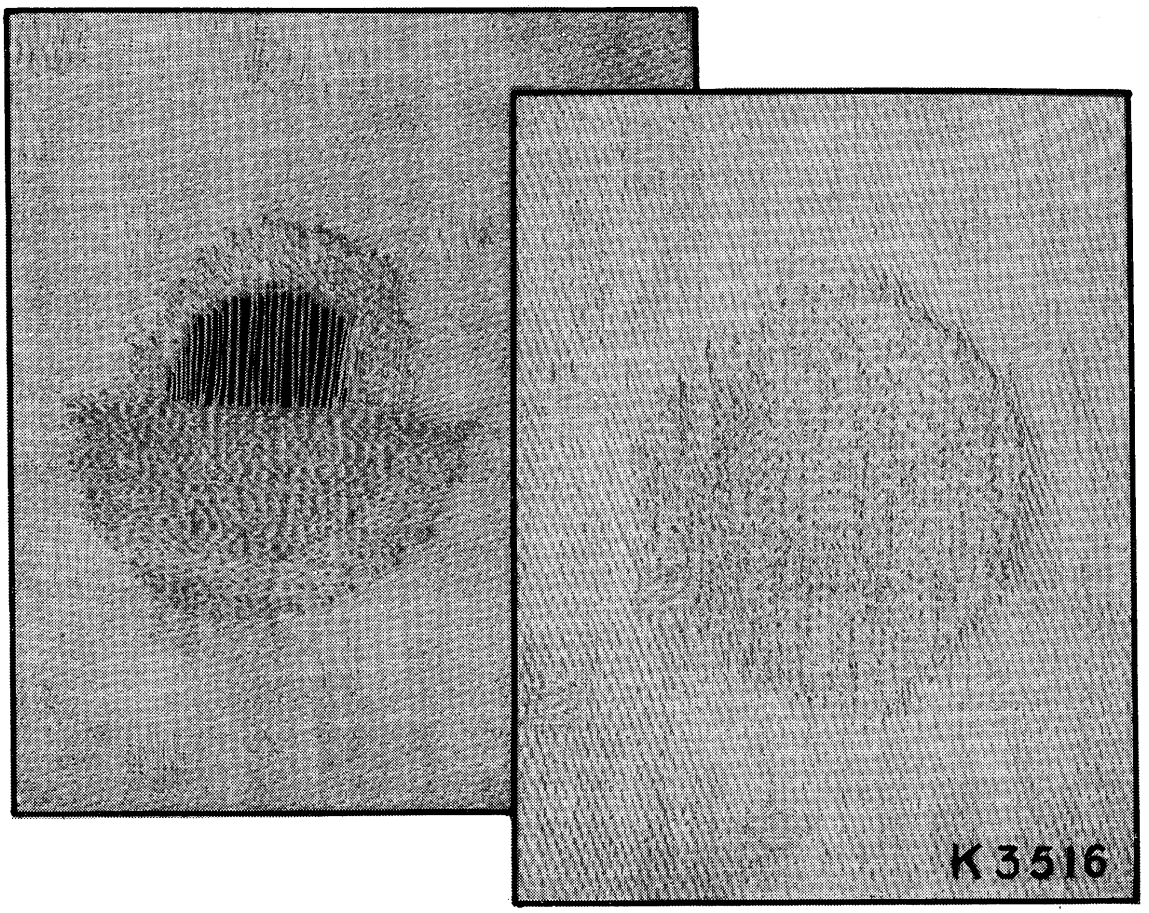

FIG. 139. DARNING ON SECTION OF TABLE CLOTH IN PROCESS AND COMPLETED.

If the stitches are loose on the under side, either the presser bar is not down or the tensions are not properly adjusted.

Rug Making, etc.

With the aid of an inexpensive device called a "Singercraft Guide" excellent rugs can be produced using ordinary rug wool, rag strips, damaged silk stockings cut spiral, or on the bias in strips, and other similar material. The work is pleasant and fascinating, while the result is equal to the slow, tedious hand methods and uses considerably less wool.

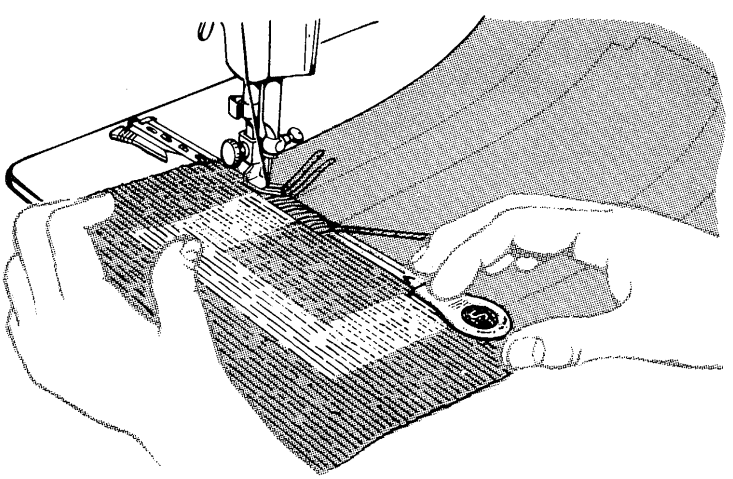

FIG. 140.

An almost endless variety of other articles in wool, etc., is possible to the artistic worker with a Singercraft Guide, and those interested should ask for further particulars at any Singer Shop.

SINGER*

AUTOMATIC ZIGZAGGER

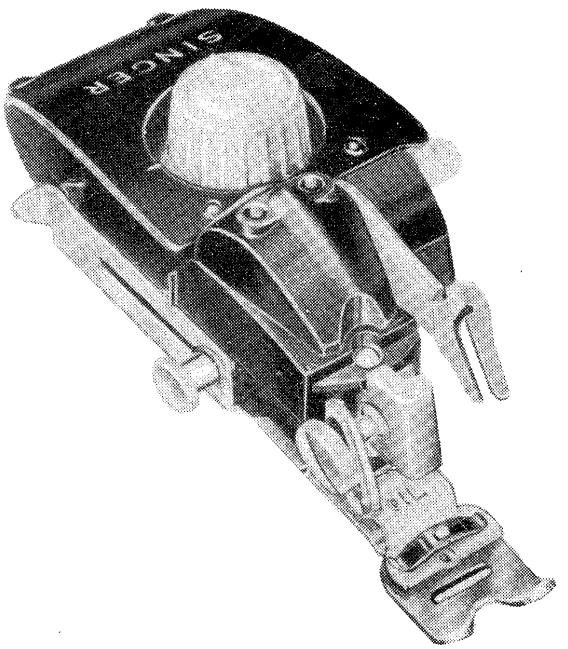

FIG. 141.
ZIGZAGGER FOR 15K AND 201K MACHINES.

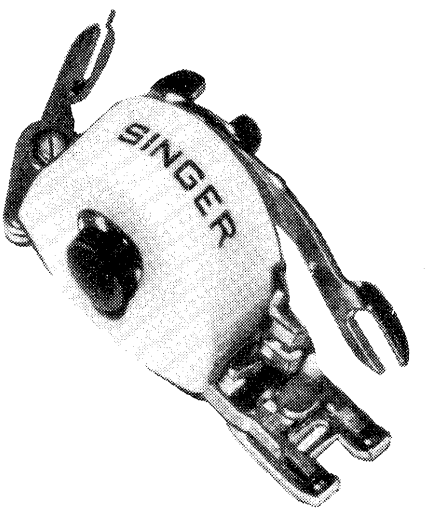

FIG. 142.
ZIGZAGGER FOR 99K, 185K AND 329K MACHINES.

This wonderful SINGER fashion aid will enable you to produce an infinite variety of attractive ornamental designs merely through the interchange of the different Stitch Patterns and the adjustment of the bight and stitch length. Such decorative effects as applique, scalloped edges, border designs, as well as blind stitched hems and simple mending can be produced with this attachment on women's and children's clothing, lingerie, linens, draperies and an unlimited array of other garments and household items.

With the flick of a lever, plain sewing may be done without removing the zigzagger from the sewing machine.

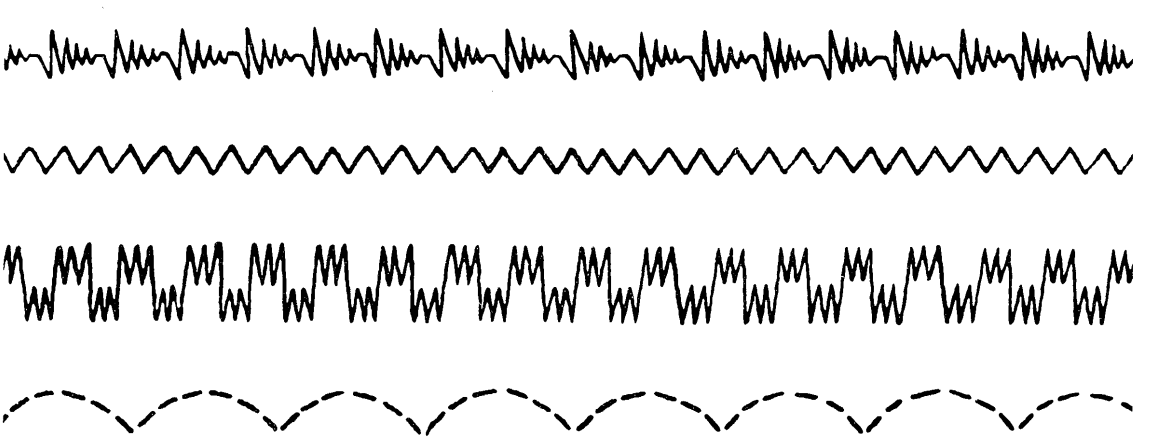

THE ELECTRIC SEWING MACHINE.

In this electrical age there are few household appliances more valuable than the electric sewing machine. Sewing then becomes a positive pleasure ; you just plug into a lamp socket or wall plug, and switch on. Both hands are free to guide the work, and the speed of the machine, which is regulated by gentle pressure on the speed controller, may be varied at will to suit the work in hand. For example, the machine may be controlled to run at a low speed when sewing a short length of seam, or where great care must be taken in guiding the material. On long seams the speed of the electric machine is much greater than is possible when working by hand or foot treadle.

It is not necessary to touch the wheel, as the machine will always start in the right direction.

The following illustrate the various types of electric machines most commonly used :—

Types of Electric Sewing Machines.

Electric Sewing Machines are of four principal types : the treadle machine with a motor attached, the portable machine, the electric cabinet machine, and the electric desk cabinet machine.

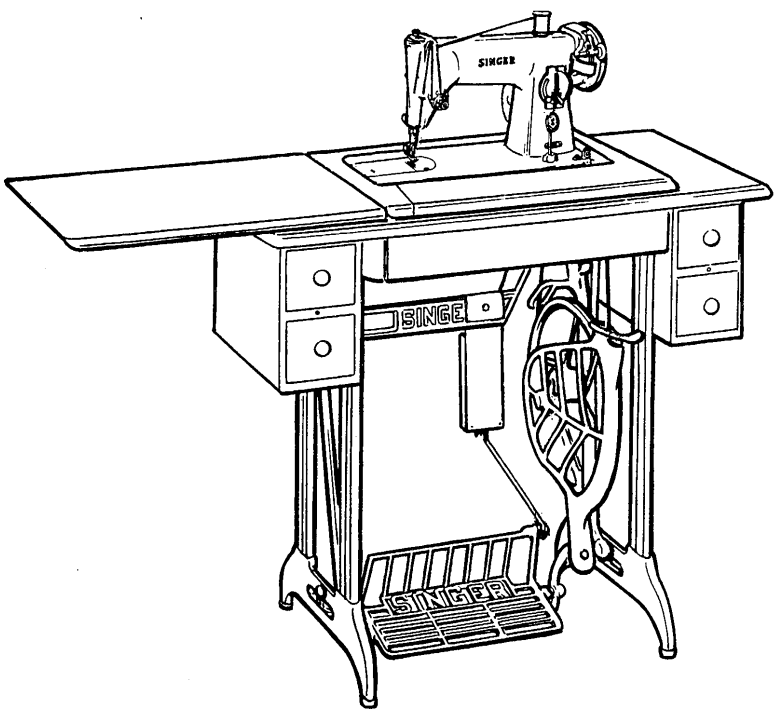

FIG. 143.

One form (the Treadle machine) is shown in Fig. 143. The motor is attached to the machine by a bracket fixed with a single screw to the arm of the machine below the hand wheel. The regular treadle belt is removed

and substituted by the small motor belt connecting the hand wheel of the machine with the pulley of the motor. The speed controller is attached to the brace of the stand and then connected to the treadle of the machine by means of the Pitman Rod, which has first been unscrewed from the driving crank of the band wheel. An ordinary treadle machine can thus become an electric one. The conversion takes only a few minutes and can be done by anyone without electrical or mechanical skill. When it is desired to operate the machine, the motor flex is plugged into a lamp socket or wall plug and gentle pressure on the treadle sets the machine in motion. The speed of the machine is varied according to the amount of pressure applied.

The Portable Electric Machine.

Another model is the Portable Electric Machine, shown in Fig. 144. The illustration shows the equipment supplied with this type of machine which enjoys great popularity because of its compactness and usefulness.

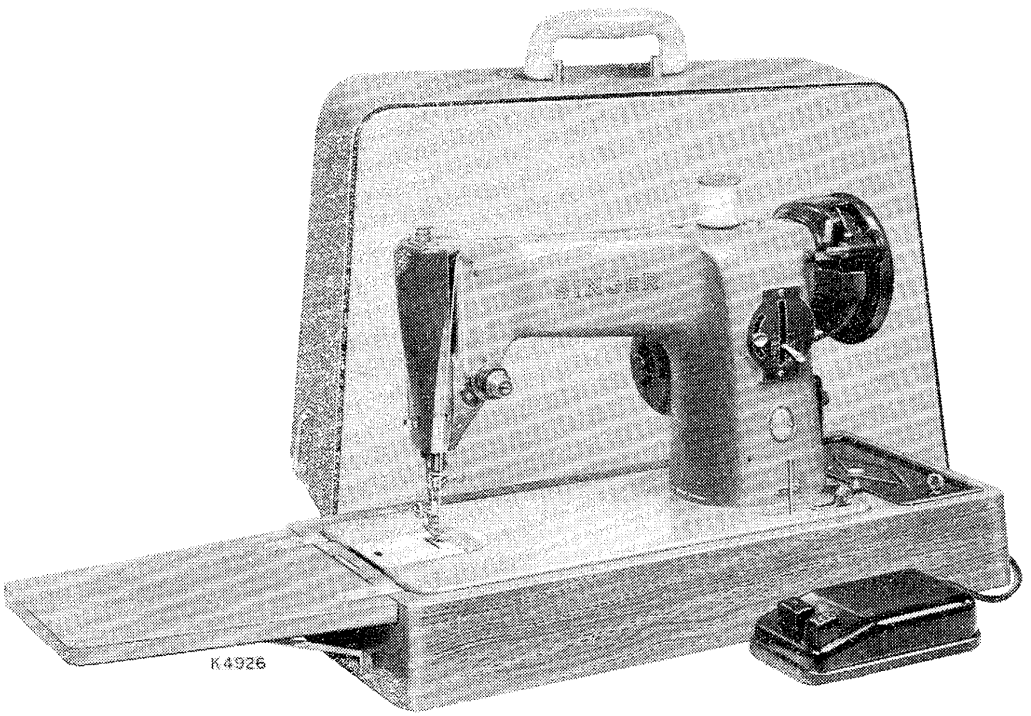

FIG. 144.

The Electric Desk Cabinet Machine.

The third model is the Desk Cabinet machine. (See Fig. 145). In this case the machine is mounted on an elegant table. The motor is attached to the machine, as already described, and the controller is located on the floor. When not in use the machine head is lowered beneath the table top, and the wooden extension leaf of the table folded over. The table then becomes an elegant article of furniture which can be used for any purpose to which a small fancy table can be put.

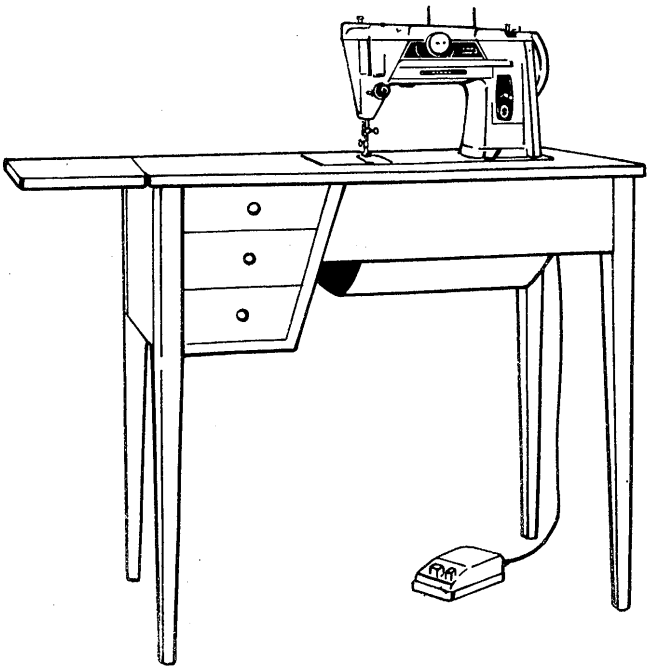

FIG. 145.

The Electric Cabinet Machine.

(See Fig. 146).

The fourth model is the Electric Cabinet Machine. Here the machine is mounted on an elegant cabinet. The motor is attached to the machine as previously described, and the controller is located on the floor. When not in use the machine is lowered beneath the cabinet top, the hinged leaf is folded over and the door closed to give a handsome piece of furniture which will enhance any room.

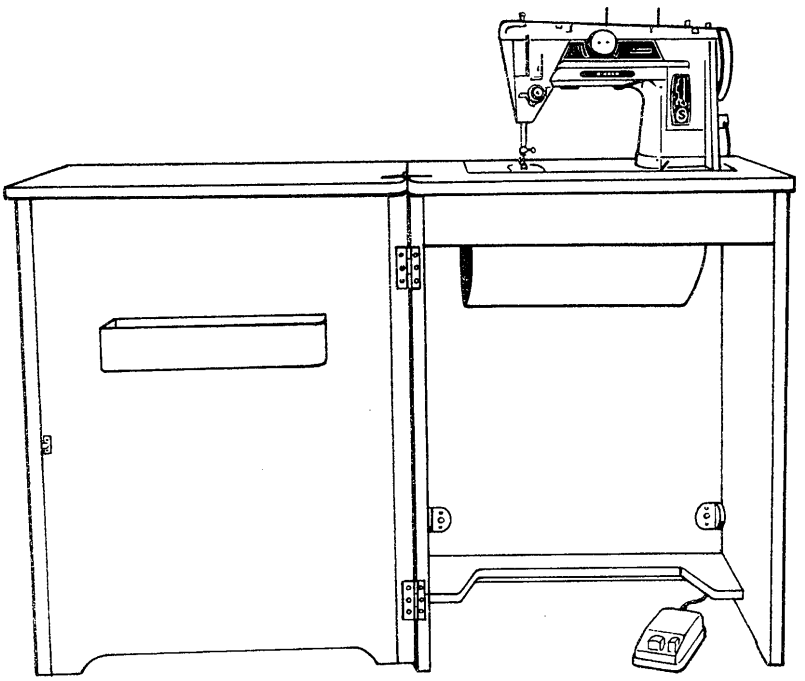

FIG. 146.

The Singer Light.

For all machines, whether hand, treadle, or electric, the Singer Light is recommended, if electric current is available. This little light is attached to the arm of the machine and projects its light on to the material just where it is being stitched. It greatly adds to the comfort of the operator as it prevents eyestrain and makes the threading of the needle easy. No machine is complete without a Singer Light.

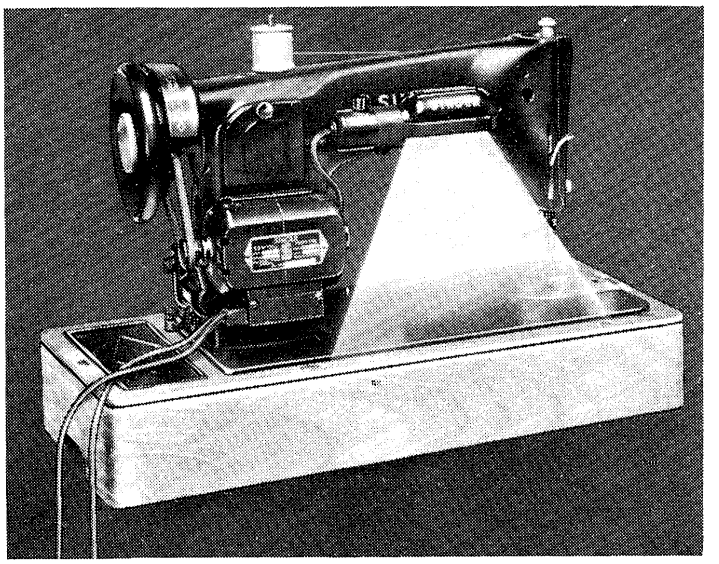

FIG. 147.

Conversion of Ordinary Singer Machines to Electric Machines.

An ordinary Singer Machine may be converted at a comparatively small cost, and without trouble, into an electric one.

In the case of a hand machine, the foot controller, as illustrated in Fig. 148, is furnished with the motor so that it is unnecessary to exchange the wooden base and cover. The speed of the machine is controlled by pressure on the foot pedal.

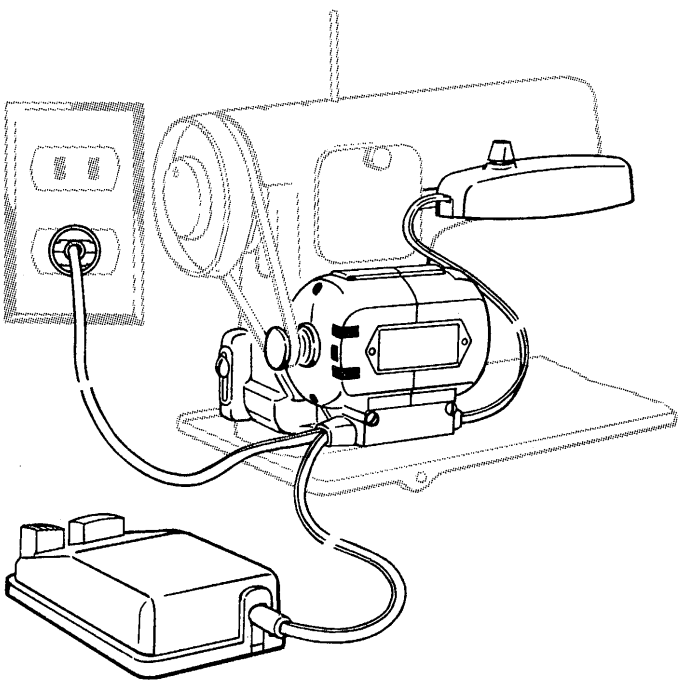

FIG. 148. PORTABLE MACHINE WITH FOOT CONTROL.

SWING NEEDLE MACHINES.

The modern trend in sewing machines is towards the zig-zag or swing needle machines. In this class, there are three Singer models, the Singer Slant-O-Matic, the Singer 328K and the Singer 327K. The Singer Swing Needle Machine is an example of modern engineering precision, with it you will have at your finger tips the means for making garments beautifully decorated and articles of real value for your home, and at the same time, without fuss or bother, you have a machine emanently excellent for all regular sewing work. These machines have almost unlimited possibilities in sewing, from beautiful straight stitches to magical embroidery. In addition, they provide the practical time saving seam and hem finishing and mending that any home maker has to do.

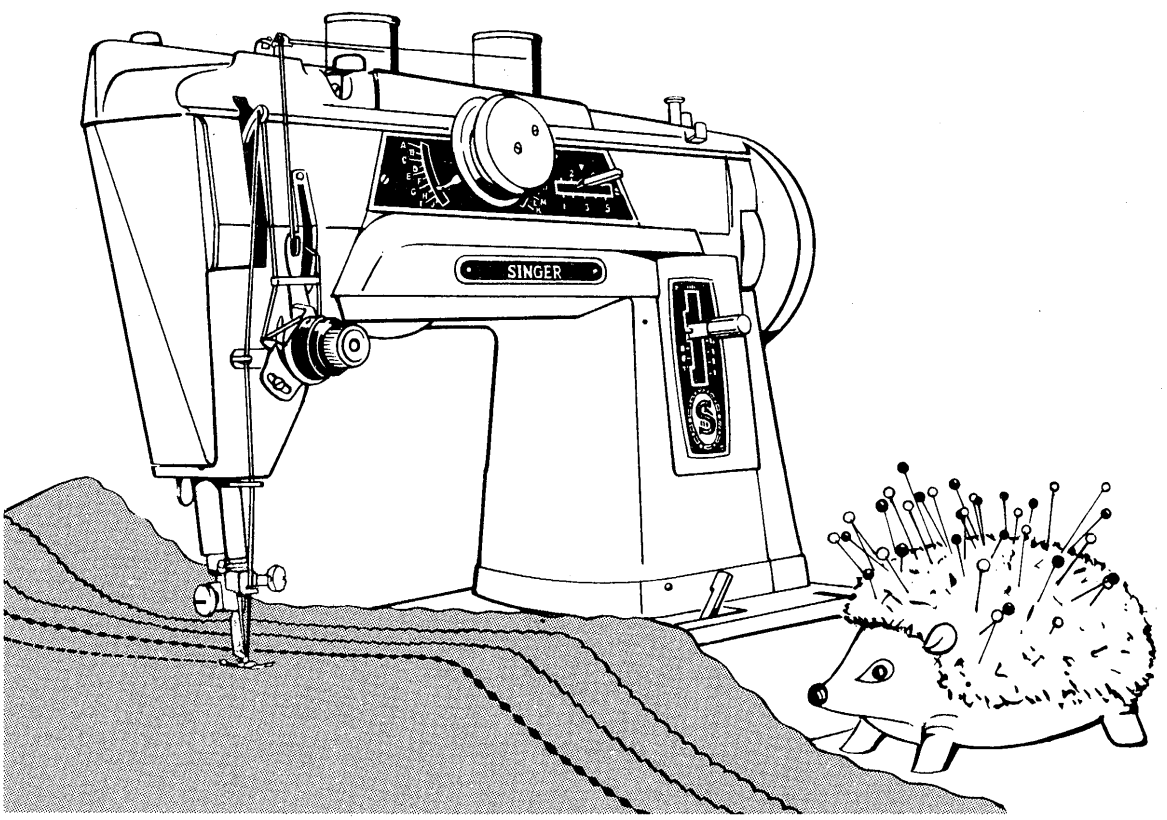

EXAMPLES OF AUTOMATIC STITCH PATTERNS.

Decorative designs need not be limited to those done automatically, for the possibility of creative designs are endless.

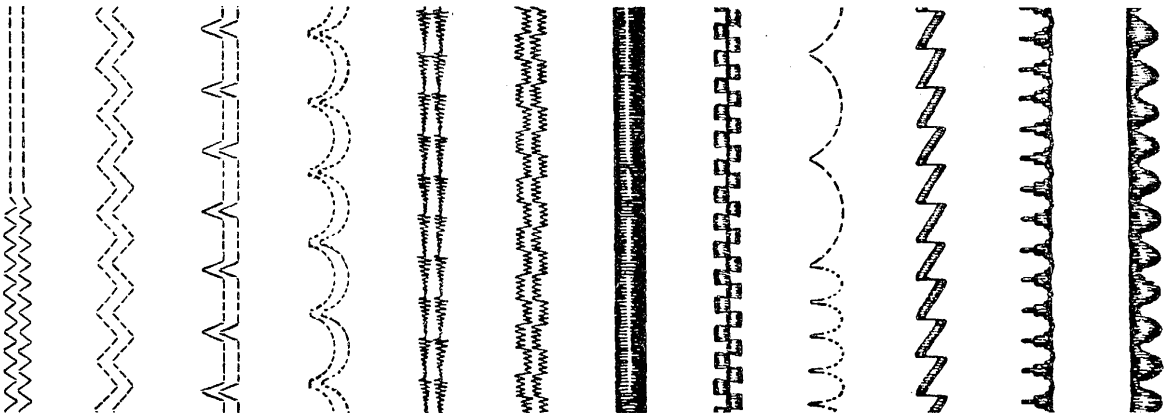

SWING NEEDLE TRANSFERS.

Examples of successful blending of automatic embroidery stitches are contained in a series of 12 specially designed Swing Needle Transfers. These give ideas of some of the many ways in which Swing Needle stitchery can be made to add extra beauty to the things that you make.

More precise information on Swing Needle stitching can be obtained from the instruction books.